JOURNAL OF MATHEMATICAL PHYSICS VOLUME 11, NUMBER 2 FEBRUARY 1970

Green's Functions for Multidimensional Neutron Transport in a Slab

G. GARRETTSON* AND A. LEONARD
Department of Mechanical Engineering, Nuclear Division, Stanford University, Stanford, California 94305

(Received 23 April 1969)

The integral form of the one-speed, steady-state Boltzmann transport equation is solved for a point source in a homogeneous, isotropically scattering slab. In addition, solutions are obtained for line sources and plane sources in the slab, both normal and parallel to the slab faces. Using Fourier and Laplace transforms, the problem is reduced to that of solving a 1-dimensional integral equation with a difference kernel. This equation is transformed into a singular integral equation which is solved using standard methods. The Green's functions are subsequently obtained as generalized eigenfunction expansions over the spectrum of the 1-dimensional integral operator. This form yields a simple solution far from the source, and alternate expressions are obtained to facilitate evaluation near the source. In a thick slab the exact solutions are shown to reduce to simple closed expressions plus correction terms that decrease exponentially as the slab thickness increases. Most of the work previously done in multidimensional transport in slabs is shown to be easily reproduced using this theory in the thick-slab approximation. Also, virtually all other problems of this type can be solved using the theory presented here. In particular, the density from a pencil beam of particles normally incident to the slab is obtained.

1. INTRODUCTION

Until now, only a few problems in multidimensional transport theory have been treated analytically. Elliott[1] and Erdmann[2] give solutions for a point source in a half-space and two adjacent half-spaces, respectively, using the Wiener–Hopf technique, and Erdmann[3] iterates the half-space result to obtain an approximate solution to the point source in a slab. Starting with the integral transport equation, Smith[4] and Hunt[5] consider several problems of 2-dimensional transport in a 1-dimensional medium. Smith uses the Wiener–Hopf technique to solve for the isotropic scattering of radiation normally incident to a half-space and sinusoidally modulated in one transverse direction. Hunt considers radiation normally incident to a slab atmosphere and having radial symmetry with modulation $J_0(Br)$. He uses the replication property of the kernel to reduce the problem to that of solving the 1-dimensional integral equation which we treat in Sec. 4 by a different method.

Several attempts have been made to approximate the effect of finite transverse dimensions. Williams[6] and Kaper[7] use asymptotic theory ($e^{i\mathbf{B}\cdot\mathbf{r}}$ distribution) in the transverse direction and consider the resultant modified 1-dimensional transport equations. Williams treats the integral transport equation while Kaper considers the integro-differential equation. And in a semi-infinite slab ($z \in [0, \infty)$, $y \in [-y_0, y_0]$, and $x \in (-\infty, \infty)$), Smith and Hunt[8] solve the integral transport equation approximately as a series in powers of e^{-y_0} by Laplace transforming in z and taking a Fourier cosine series in y.

To solve the transport equation in a finite prism with a point-isotropic source at its center, Boffi and Molinari[9] utilize the 3-dimensional Fourier transform. They obtain their solution as a spatial convolution of the point-source kernel with a function expressed as a triple summation of Legendre polynomials, whose coefficients are solutions to an infinite set of simultaneous algebraic equations.

A somewhat different approach to the problem of transport in 2- and 3-dimensional geometries has been developed by Gibbs.[10] Here the neutron density is shown generally to be expandable in a countable set of functions which satisfy a Helmholtz equation with continuous parameter. The expansion coefficients satisfy a set of coupled singular integral equations in the parameter. In his study of a particular quarter-space Milne problem, McCormick[11] uses Gibbs' approach to develop a coupled set of integral equations for the expansion coefficients.

Recently, Williams[12] has solved a simple 2-dimensional source problem in a 1-dimensional wide slab by Fourier transformation of the integral equation in the transverse direction. In the present paper, we determine the Green's function for all 2- or 3-dimensional source distributions in the 1-dimensional slab, i.e., we

* Present address: Physics Department, Naval Postgraduate School, Monterey, Calif. 93940.

[1] J. P. Elliott, Proc. Roy. Soc. (London) **A228**, 424 (1955).

[2] R. C. Erdmann, J. Math. Phys. **8**, 1040 (1967).

[3] L. B. Gratt and R. C. Erdmann, "The Wide Slab Flux from a Point Source of Neutrons," ANS Trans., 215 (June, 1969).

[4] M. G. Smith, Proc. Cambridge Phil. Soc. **60**, 909 (1964).

[5] G. E. Hunt, SIAM J. Appl. Math. **16**, 228 (1968).

[6] M. M. R. Williams, Nukleonik **9**, 305 (1967).

[7] Hans G. Kaper, J. Math. Phys. **10**, 286 (1969).

[8] M. G. Smith and G. E. Hunt, Proc. Cambridge Phil. Soc. **63**, 209 (1967).

[9] V. C. Boffi and V. Molinari, CNEN Report RT/FI(68) 43, Rome (1968).

[10] Alan G. Gibbs, J. Math. Phys. **10**, 875 (1969).

[11] S. I. Shreiner, N. J. McCormick, A. G. Gibbs, "Transport Solution of a Quarter-Space Problem," ANS Trans., 160 (June 1969).

[12] M. M. R. Williams, J. Math. Phys. **9**, 1873 (1968).

find the solution to a point uncollided source located at an arbitrary point in the slab. Using Fourier transforms in the transverse directions and a Laplace transform in the normal direction, we reduce the integral transport equation to a 1-dimensional integral equation with a difference kernel depending parametrically on the transform variables. A complete solution to this reduced equation is then obtained by the methods of Leonard and Mullikin.[13,14] Two alternate calculations of the Fourier inversion integral are given, one using contour integration and exploiting the singularities of the transform and the other evaluating analytically those parts of the transform that are not absolutely integrable. The former yields a simple solution for large transverse arguments, while the latter yields an expression which is easily evaluated numerically for small and intermediate arguments.

2. THE PROBLEM

Consider a homogeneous slab of thickness τ, which has a total cross section σ, and emits c secondaries per collision. The slab, infinite in both transverse directions, is surrounded by a vacuum or a pure absorber (see Fig. 1). Under the assumptions of steady-state, one-speed, and isotropic scattering, the integral equation for the neutron density $\rho(\mathbf{r})$ in the slab is

$$\rho(\mathbf{r}) = \frac{c\sigma}{4\pi}\int_0^\tau d\hat{x}\iint_{-\infty}^{+\infty}\frac{e^{-\sigma|\mathbf{r}-\hat{\mathbf{r}}|}}{|\mathbf{r}-\hat{\mathbf{r}}|^2}\rho(\hat{\mathbf{r}})\,d\hat{y}\,d\hat{z} + S(\mathbf{r}), \quad (2.1)$$

with $0 \le x \le \tau$ and $-\infty < y,\ z < \infty$, where $\mathbf{r} = (x, y, z)$ and

$$|\mathbf{r}-\hat{\mathbf{r}}| = [(x-\hat{x})^2 + (y-\hat{y})^2 + (z-\hat{z})^2]^{\frac{1}{2}},$$

and where $S(\mathbf{r})$ is the uncollided neutron density.

Equation (2.1) is valid for any neutron-transport problem in the slab, including surface sources and/or volume sources. The uncollided neutron density $S(\mathbf{r})$ must first be obtained by considering the various neutron sources that are present and by using the methods in, e.g., Case, de Hoffman, and Placzek.[15] As an example, for a monodirectional pencil beam incident at $\mathbf{r} = 0$ in the direction $\mathbf{\Omega}_0(\theta_0, \varphi_0)$ (see Fig. 2), we have

$$S(\mathbf{r}) = e^{-\sigma x/\cos\theta_0}\delta(y - x\tan\theta_0\cos\varphi_0) \times \delta(z - x\tan\theta_0\sin\varphi_0). \quad (2.2)$$

To obtain the neutron density in a slab for any uncollided density $S(\mathbf{r})$, it is convenient to have the

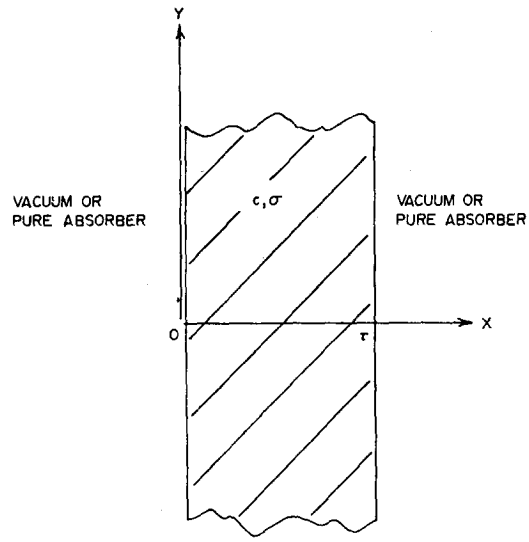

FIG. 1. A bare homogeneous slab.

Green's function $G(\mathbf{r}; \mathbf{r}')$, which satisfies

$$G(\mathbf{r}; \mathbf{r}') = \frac{c\sigma}{4\pi}\int_0^\tau d\hat{x}\iint_{-\infty}^{+\infty}\frac{e^{-\sigma|\mathbf{r}-\hat{\mathbf{r}}|}}{|\mathbf{r}-\hat{\mathbf{r}}|^2}G(\hat{\mathbf{r}}; \mathbf{r}')\,d\hat{y}\,d\hat{z} + \delta^3(\mathbf{r}-\mathbf{r}'), \quad (2.3)$$

with $\mathbf{r}' = (x', y', z')$, $0 \le x, x' \le \tau$, and

$$-\infty < y', y, z', z < +\infty.$$

In Cartesian and cylindrical coordinates, the Dirac δ functions are

$$\delta^3(\mathbf{r}-\mathbf{r}') = \delta(x-x')\delta(y-y')\delta(z-z') = \delta^2(\tilde{\mathbf{r}}-\tilde{\mathbf{r}}')\delta(z-z'), \quad (2.4)$$

with

$$\delta^2(\tilde{\mathbf{r}}-\tilde{\mathbf{r}}') = [\delta(|\tilde{\mathbf{r}}-\tilde{\mathbf{r}}'|)/|\tilde{\mathbf{r}}-\tilde{\mathbf{r}}'|]\delta(\varphi-\varphi'),$$

where $\tilde{\mathbf{r}} = (\tilde{r}, \varphi)$ in cylindrical coordinates, $\tilde{\mathbf{r}} = (y, z)$ in Cartesian coordinates, and where $|\tilde{\mathbf{r}}-\tilde{\mathbf{r}}'| = [(y-y')^2 + (z-z')^2]^{\frac{1}{2}}$. Then the solution to (2.1) is given formally by

$$\rho(\mathbf{r}) = \int_0^\tau dx'\iint_{-\infty}^{+\infty}G(\mathbf{r}; \mathbf{r}')S(\mathbf{r}')\,dy'\,dz', \quad (2.5)$$

and the angular neutron density can easily be obtained from $\rho(\mathbf{r})$ by quadrature.[15]

Although the point-uncollided density in (2.3) is mathematically convenient, it is not physically realizable. Therefore, some people prefer to work with a point-isotropic source. Under the assumptions of isotropic scattering, there is a simple relationship between the point-isotropic-source Green's function $G_{\text{iso}}(\mathbf{r}; \mathbf{r}')$ and the point-uncollided-source Green's function $G(\mathbf{r}; \mathbf{r}')$:

$$G(\mathbf{r}; \mathbf{r}') = c\sigma G_{\text{iso}}(\mathbf{r}; \mathbf{r}') + \delta^3(\mathbf{r}-\mathbf{r}'), \quad (2.6)$$

[13] A. Leonard and T. W. Mullikin, Trans. A.M.S. **116**, 465 (1965).
[14] A. Leonard and T. W. Mullikin, J. Math. Phys. **44**, 327 (1965).
[15] K. M. Case, F. de Hoffmann, and G. Placzek, *Introduction to the Theory of Neutron Diffusion* (U.S. Government Printing Office, Washington, D.C., 1953).

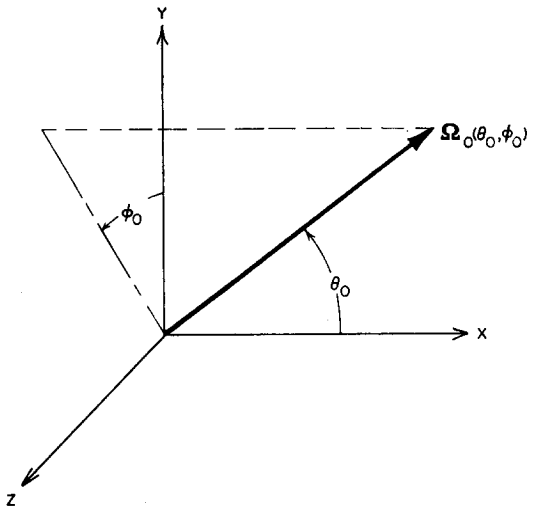

FIG. 2. The unit vector $\mathbf{\Omega}(\theta_0, \phi_0)$.

where $G_{\text{iso}}(\mathbf{r}; \mathbf{r}')$ satisfies (2.1) with $S(\mathbf{r}) = e^{-\sigma|\mathbf{r}-\mathbf{r}'|}/4\pi\,|\mathbf{r} - \mathbf{r}'|^2$, which is the uncollided density at $\mathbf{r}$ from a unit point-isotropic source at $\mathbf{r}'$. The once-collided density at $\mathbf{r}$ from a point-uncollided source at $\mathbf{r}'$ is simply $c\sigma(e^{-\sigma|\mathbf{r}-\mathbf{r}'|}/4\pi\,|\mathbf{r} - \mathbf{r}'|^2)$.

3. TRANSFORMATION OF THE GREEN'S FUNCTION

One approach to solving (2.3) is to write a Neumann series solution

$$G(\mathbf{r}; \mathbf{r}') = (1 + \mathbf{\Delta} + \mathbf{\Delta}^2 + \cdots)\delta^3(\mathbf{r} - \mathbf{r}'), \quad (3.1)$$

where

$$\mathbf{\Delta}[\cdot] = \frac{c\sigma}{4\pi}\int_0^\tau d\hat{x}\iint_{-\infty}^{+\infty}\frac{e^{-\sigma|\mathbf{r}-\hat{\mathbf{r}}|}}{|\mathbf{r} - \hat{\mathbf{r}}|^2}[\cdot]\,d\hat{y}\,d\hat{z}. \quad (3.2)$$

However, if we take the norm of $\mathbf{\Delta}$ to be

$$\|\mathbf{\Delta}\| = \max_{\substack{0\le x\le\tau\\ -\infty<y,z<+\infty}} \frac{c\sigma}{4\pi}\int_0^\tau d\hat{x}\iint_{-\infty}^{+\infty}\frac{e^{-\sigma|\mathbf{r}-\hat{\mathbf{r}}|}}{[\mathbf{r} - \hat{\mathbf{r}}]}\,d\hat{y}\,d\hat{z}, \quad (3.3)$$

then $\|\mathbf{\Delta}\| = c[1 - E_2(\frac{1}{2}\sigma\tau)]$, where

$$E_n(q) = \int_1^\infty e^{-qu}\frac{du}{u^n}, \quad n = 1, 2, \cdots. \quad (3.4)$$

[See Ref. 15 for numerical tabulations of $E_n(q)$.] So, unless c or $\sigma\tau$ is very small, the Neumann series converges slowly. Therefore, it is desirable to solve (2.3) by other means.

To do so, first note that, if $g(x, y, z; x')$ satisfies

$$g(x, y, z; x') = \mathbf{\Delta}[g](x, y, z; x') + \delta(x - x')\delta(y)\delta(z), \quad (3.5)$$

for $0 \le x, x' \le \tau$ and $-\infty < y, z < +\infty$, then

$$G(\mathbf{r}; \mathbf{r}') = g(x, y - y', z - z'; x'), \quad (3.6)$$

for $0 \le x, x' \le \tau$ and $-\infty < y, y', z, z' < +\infty$. To obtain $g(x, y, z; x')$, we first transform (3.5) into a 1-dimensional integral equation with a difference kernel, solve that equation, and then invert the transform.

Now we define the 2-dimensional Fourier transform in y and z (or, equivalently, the Hankel transform in $\tilde{r}$):

$$\mathcal{G}(x, B; x') = \iint_{-\infty}^{+\infty} g(x, y, z; x') \times \exp(-i\omega_y y - i\omega_z z)\,dy\,dz, \quad (3.7)$$

where $B = (\omega_y^2 + \omega_z^2)^{\frac{1}{2}}$. Then its inverse is

$$g(x, y, z; x') = \frac{1}{(2\pi)^2}\iint_{-\infty}^{+\infty}\mathcal{G}(x, B; x')\exp(i\omega_y y + i\omega_z z)\,d\omega_y\,d\omega_z = \frac{1}{2\pi}\int_0^\infty \mathcal{G}(x, B; x')J_0(B\tilde{r})B\,dB, \quad (3.8)$$

where $\tilde{r} = |\tilde{\mathbf{r}}| = (y^2 + z^2)^{\frac{1}{2}}$, and where J_0 is the ordinary Bessel function.[16] The B dependence of $\mathcal{G}(x, B; x')$ will become evident from the equation it satisfies.

Taking the 2-dimensional Fourier transform of Eq. (3.5), we have

$$\mathcal{G}(x, B; x') = \tfrac{1}{2}c\sigma\int_0^\tau K(|x - \hat{x}|; B^2)\mathcal{G}(\hat{x}, B; x')\,d\hat{x} + \delta(x - x'), \quad (3.9)$$

where[4,5]

$$K(|x - \hat{x}|; B^2) = \int_\sigma^\infty \exp[-|x - \hat{x}|(B^2 + \eta^2)^{\frac{1}{2}}]\frac{d\eta}{(B^2 + \eta^2)^{\frac{1}{2}}}, \quad (3.10)$$

or

$$K(|x - \hat{x}|; B^2) = \int_0^{\alpha(B)}\frac{\exp(-|x - \hat{x}|/s)}{s(1 - s^2B^2)^{\frac{1}{2}}}\,ds, \quad (3.11)$$

in which $\alpha(B) = (B^2 + \sigma^2)^{-\frac{1}{2}}$. Note that $K(|x|; 0) = E_1(\sigma\,|x|)$, the familiar plane-source kernel. Defining the integral operator

$$\Delta_B[\cdot] = \tfrac{1}{2}c\sigma\int_0^\tau K(|x - \hat{x}|; B^2)[\cdot]\,d\hat{x} \quad (3.12)$$

will simplify the notation.

[16] *Handbook of Mathematical Functions*, M. Abramowitz and Irene Stegers, Eds. (U.S. Government Printing Office, Washington, D.C., 1964).

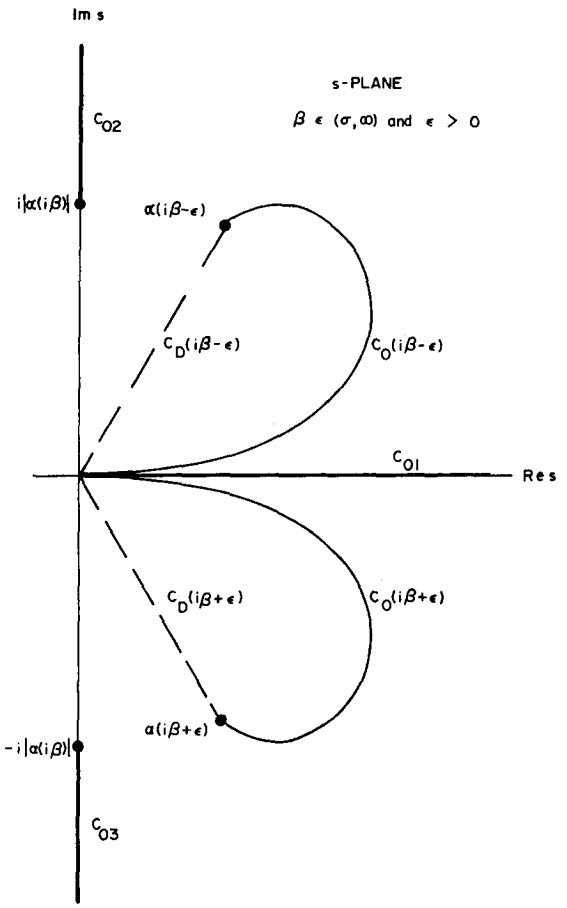

FIG. 3. The cut $C_0(B)$ and the deformed cut $C_D(B)$ for $B \notin C_+ \cup C_-$; the limit cuts of $C_0(B)$, $C_{01} \cup C_{02}$ and $C_{01} \cup C_{03}$, for $B \to i\beta \in C_+ \cup C_-$.

Both $\alpha(B)$ and $K(|x|; B^2)$ are analytic in the complex B plane cut by $C_+ \cup C_-$, where $C_\pm = \{\pm i\beta\colon \beta \in (\sigma, \infty)\}$. For complex B, Eq. (3.11), and all succeeding integrals with limits 0 to $\alpha(B)$, are to be interpreted as contour integrals along $C_0(B) = \{(B^2 + \eta^2)^{-\frac{1}{2}}\colon \eta \in (\infty, \sigma)\}$. For $B \notin C_+ \cup C_-$, $C_0(B)$ may be deformed to the straight-line contour between 0 and $\alpha(B)$, $C_D(B) = \{t \cdot \alpha(B)\colon t \in (0, 1)\}$, as shown in Fig. 3. However, in the limit $B \to i\beta \in C_+ \cup C_-$,

$$\lim_{\substack{\epsilon\to 0\\ \epsilon>0}} C_0(i\beta - \epsilon) = \lim_{\substack{\epsilon\to 0\\ \epsilon>0}} C_0(-i\beta + \epsilon) = C_{01} \cup C_{02}$$

and

$$\lim_{\substack{\epsilon\to 0\\ \epsilon>0}} C_0(i\beta + \epsilon) = \lim_{\substack{\epsilon\to 0\\ \epsilon>0}} C_0(-i\beta - \epsilon) = C_{01} \cup C_{03},$$

where $\beta \in (\sigma, \infty)$ and where $C_{01} = (0, \infty]$, $C_{02} = \{it\colon t \in [\infty, |\alpha(i\beta)|)\}$, and $C_{03} = \{it\colon -t \in [\infty, |\alpha(i\beta)|)\}$.

To finally obtain an integral equation that one can solve, we define the Laplace transform

$$F(x, B; \gamma) = \int_{-\infty}^{+\infty} \mathcal{G}(x, B; x') e^{-x'\gamma}\, dx' \quad (3.13)$$

and its inverse

$$\mathcal{G}(x, B; x') = \frac{1}{2\pi i} \int_{-i\infty}^{+i\infty} F(x, B; \gamma) e^{x'\gamma}\, d\gamma, \quad (3.14)$$

and then we transform (3.9) to obtain

$$F(x, B; \gamma) = \Delta_B[F](x, B; \gamma) + e^{-x\gamma}. \quad (3.15)$$

Using (3.14), (3.8), and (3.6), we can write the inversion formula for the Green's function in terms of the solution to (3.15):

$$G(\mathbf{r}; \mathbf{r}') = \frac{1}{4\pi^2 i} \int_0^\infty \int_{-i\infty}^{+i\infty} F(x, B; \gamma) \times e^{\gamma x'} J_0(B\,|\tilde{\mathbf{r}} - \tilde{\mathbf{r}}'|) B\, d\gamma\, dB. \quad (3.16)$$

Equation (3.15) will be solved treating B and γ as complex parameters. Then the Fourier and Laplace inversions (3.16) may be carried out in either order to yield the Green's function. In Sec. 7, we demonstrate that the result at each step of the inversion can be physically interpreted as the solution to a relevant multidimensional neutron-transport problem in a slab.

4. SOLUTION OF (3.15)

The Neumann series solution to (3.15),

$$F(x, B; \gamma) = (1 + \Delta_B + \Delta_B^2 + \cdots) e^{-x\gamma}, \quad (4.1)$$

converges slowly except for small c or $\sigma\tau$ or large B. However, one can use the methods of Leonard and Mullikin[13,14] to solve (3.15). By transforming (3.15) into a singular integral equation in γ, one obtains the solution to $F(x, B; \gamma)$ in terms of solutions to other Fredholm integral equations whose Neumann series solutions converge rapidly, at least for B not near $C_+ \cup C_-$.

For these purposes it is convenient to consider the auxiliary functions $f_{(\pm)}(x, B; \zeta)$ which satisfy

$$f_{(\pm)}(x, B; \zeta) = \Delta_B[f_{(\pm)}](x, B; \zeta) + S_{(\pm)}(x, \zeta), \quad (4.2)$$

with $S_{(\pm)}(x, \zeta) = e^{-x/\zeta} + (\pm) e^{-(\tau - x)/\zeta}$. Then,

$$F(x, B; \gamma) = \tfrac{1}{2}\{f_+(x, B; \gamma^{-1}) + f_-(x, B; \gamma^{-1})\}. \quad (4.3)$$

From (4.2) we have the formal solution

$$f_{(\pm)}(x, B; \zeta) = (I - \Delta_B)^{-1}[S_{(\pm)}](x, B; \zeta), \quad (4.4)$$

where $I[\cdot]$ is the identity operator and where $(I - \Delta_B)^{-1}[\cdot]$ is the inverse of the operator $I[\cdot] - \Delta_B[\cdot]$.

Operating on $S_{(\pm)}(x, \zeta)$ with $\Delta_B[\cdot]$, we obtain

$$\begin{aligned}
&\Delta_B[S_{(\pm)}](x, B; \zeta) \\
&= \tfrac{1}{2}c\sigma\int_0^\tau K(|x-\hat{x}|; B^2)[e^{-\hat{x}/\zeta} + (\pm)e^{-(\tau-\hat{x})/\zeta}]\,d\hat{x} \\
&= \tfrac{1}{2}c\sigma\zeta\Bigg[S_{(\pm)}(x,\zeta)\int_0^{\alpha(B)}\left(\frac{1}{s+\zeta} - \frac{1}{s-\zeta}\right)\frac{ds}{(1-B^2s^2)^{\frac{1}{2}}} \\
&\quad + \int_0^{\alpha(B)}\frac{S_{(\pm)}(x,s)}{s-\zeta}\frac{ds}{(1-B^2s^2)^{\frac{1}{2}}} \\
&\quad - (\pm)e^{-\tau/\zeta}\int_0^{\alpha(B)}\frac{S_{(\pm)}(x,s)}{s+\zeta}\frac{ds}{(1-B^2s^2)^{\frac{1}{2}}}\Bigg]. \qquad (4.5)
\end{aligned}$$

Thus, we can write the singular integral equation satisfied by $f_{(\pm)}$:

$$\begin{aligned}
&f_{(\pm)}(x, B; \zeta) \\
&= (I - \Delta_B)^{-1}\{S_{(\pm)} - \Delta_B[S_{(\pm)}] + \Delta_B[S_{(\pm)}]\}(x, B; \zeta) \\
&= S_{(\pm)}(x,\zeta) + (I-\Delta_B)^{-1}\{\Delta_B[S_{(\pm)}]\}(x, B; \zeta) \\
&= S_{(\pm)}(x,\zeta) + f_{(\pm)}(x, B; \zeta)\tfrac{1}{2}c\xi(\zeta, B)\log\frac{\xi(\zeta,B)+1}{\xi(\zeta,B)-1} \\
&\quad + \tfrac{1}{2}c\sigma\zeta\int_0^{\alpha(B)}\frac{f_{(\pm)}(x,B;s)}{s-\zeta}\frac{ds}{(1-B^2s^2)^{\frac{1}{2}}} \\
&\quad - (\pm)e^{-\tau/\zeta}\tfrac{1}{2}c\sigma\zeta\int_0^{\alpha(B)}\frac{f_{(\pm)}(x,B;s)}{s+\zeta}\frac{ds}{(1-B^2s^2)^{\frac{1}{2}}}. \qquad (4.6)
\end{aligned}$$

Hence, $F(x, B; \gamma)$ satisfies the following singular integral equation:

$$\begin{aligned}
&\Lambda\left(\xi\left(\frac{1}{\gamma}, B\right)\right)F(x, B; \gamma) \\
&= e^{-x\gamma} + \tfrac{1}{2}c\sigma\int_0^{\alpha(B)}\frac{F(x,B;s^{-1})}{s\gamma-1}\frac{ds}{(1-B^2s^2)^{\frac{1}{2}}} \\
&\quad - e^{-\tau\gamma}\tfrac{1}{2}c\sigma\int_0^{\alpha(B)}\frac{F(\tau-x,B;s^{-1})}{s\gamma+1}\frac{ds}{(1-B^2s^2)^{\frac{1}{2}}}, \qquad (4.7)
\end{aligned}$$

where

$$\Lambda(\xi) = 1 - \tfrac{1}{2}c\xi\log\frac{\xi+1}{\xi-1}, \qquad (4.8)$$

and

$$\xi(\zeta, B) = \sigma\zeta(1 - B^2\zeta^2)^{-\frac{1}{2}}. \qquad (4.9)$$

$\xi(\zeta, B) \in (0, 1)$ for $\zeta \in C_0(B)$, for all B in the complex plane cut by $C_+ \cup C_-$, and $\Lambda(\xi(\zeta, B))$ is analytic in the ζ plane cut by $C_0(B) \cup C_0^-(B)$, where $C_0^-(B) = \{-\zeta: \zeta \in C_0(B)\}$, and has two zeros $\pm\zeta_0$.

In the ζ plane, $f_{(\pm)}(x, B; \zeta)$ is analytic for all $\zeta \neq 0$ and approaches a definite limit for $\zeta \to 0$ in the right half-plane. In the B plane, $f_{(\pm)}(x, B; \zeta)$ has cuts $C_+ \cup C_-$, and poles where $\Delta_B[\cdot]$ has an eigenvalue equal to one, so that the inverse of $(I - \Delta_B)[\cdot]$ does not exist.

Treating B and γ as complex parameters, Eqs. (4.6) or (4.7) can be solved using the methods of Muskhelishvili[17] to yield the solution

$$\begin{aligned}
f_{(\pm)}(x, B; \zeta) &= \frac{h_{1(\pm)}(x, B; \zeta) + (\pm)h_{1(\pm)}(x, B; -\zeta)e^{-\tau/\zeta} - S_{(\pm)}(x, \zeta)}{\Lambda(\xi(\zeta, B))} \\
&\quad + C_{(\pm)}(x, B)\frac{h_{2(\pm)}(B; \zeta) + (\pm)h_{2(\pm)}(B; -\zeta)e^{-\tau/\zeta}}{\Lambda(\xi(\zeta, B))}, \qquad (4.10)
\end{aligned}$$

where

$$-C_{(\pm)}(x, B) = \frac{h_{1(\pm)}(x, B; \zeta_0) + (\pm)h_{1(\pm)}(x, B; -\zeta_0)e^{-\tau/\zeta_0} - S_{(\pm)}(x, \zeta_0)}{h_{2(\pm)}(B; \zeta_0) + (\pm)h_{2(\pm)}(B; -\zeta_0)e^{-\tau/\zeta_0}}. \qquad (4.11)$$

The zeros of Λ in the ζ plane are $\pm\zeta_0$:

$$\zeta_0 = \zeta_0(B) = [B^2 + (\sigma/\nu_0)^2]^{-\frac{1}{2}} \qquad (4.12)$$

and

$$\begin{aligned}
\Lambda(\xi(\pm\zeta_0, B)) &= \Lambda(\pm\nu_0) = 1 - c\nu_0\tanh^{-1}(1/\nu_0) \\
&= 0, \qquad (4.13)
\end{aligned}$$

where $\nu_0 \in [1, \infty]$ for $c \in [0, 1]$ and $-i\nu_0 \in (0, \infty]$ for $c \in [1, \infty)$. $h_{1(\pm)}(x, B; \zeta)$ and $h_{2(\pm)}(B; \zeta)$ satisfy the Fredholm integral equations

$$h_{1(\pm)}(x, B; \zeta) = -(\pm)\mathfrak{L}[h_{1(\pm)}](x, B; \zeta) + S_{(\pm)}(x, \zeta) \qquad (4.14a)$$

and

$$h_{2(\pm)}(B; \zeta) = -(\pm)\mathfrak{L}[h_{2(\pm)}](B; \zeta) + e^{-\tau/\zeta}\zeta X(-\zeta, B), \qquad (4.14b)$$

where the integral operator $\mathfrak{L}[\cdot]$ is defined as follows:

$$\begin{aligned}
&\mathfrak{L}[h_{1(\pm)}](x, B; \zeta) \\
&= \int_0^{\alpha(B)}\frac{\mathfrak{K}(B, \zeta; s)}{s+\zeta}h_{1(\pm)}(x, B; s)\frac{ds}{(1-B^2s^2)^{\frac{1}{2}}}, \qquad (4.15)
\end{aligned}$$

[17] N. I. Muskhelishvili, *Singular Integral Equations* (P. Noordhoff Ltd., Groningen, The Netherlands, 1953).

in which

$$\mathcal{H}(B, \zeta; s) = \tfrac{1}{2}c\sigma e^{-\tau/\zeta}\zeta X(-\zeta, B)\frac{X(-s, B)[\zeta_0^2 - s^2]}{\zeta_0^2 M(\xi(s, B))}, \tag{4.16}$$

$$M(\xi) = [\lambda(\xi)]^2 + [\tfrac{1}{2}c\pi\xi]^2, \tag{4.17}$$

$$X(\zeta, B) = \frac{\alpha(B)}{\alpha(B) - \zeta}\exp\left[\frac{1}{\pi}\int_0^{\alpha(B)}\left(\frac{1}{t-\zeta} - \frac{1}{t}\right)\theta(\xi(t, B))\,dt\right], \tag{4.18}$$

$$\theta(\xi) = \tan^{-1}(\tfrac{1}{2}c\pi\xi/\lambda(\xi)), \tag{4.19}$$

and

$$\lambda(\xi) = 1 - \tfrac{1}{2}c\xi\log[(1+\xi)/(1-\xi)]. \tag{4.20}$$

$X(\zeta, B)$ is constructed to be analytic in the ζ plane cut by $C_0(B)$, for all B in the B plane cut by $C_+ \cup C_-$, and to have no zeros or poles. $\theta(\xi) \in (0, \pi)$ for $\xi \in (0, 1)$, and $\xi(\zeta, B) \in (0, 1)$ for $\zeta \in C_0(B)$ [deformed to $C_D(B)$ for $B \notin C_+ \cup C_-$].

It is useful to note that $h_{1(\pm)}(x, B; \zeta)$ can be expressed in terms of $h_{2(\pm)}(B; \zeta)$ (see Ref. 14):

$$h_{1(\pm)}(x, B; \zeta) = S_{(\pm)}(x, \zeta) - (\pm)\frac{c\sigma}{2\zeta_0^2}\int_0^{\alpha(B)}\left(\frac{h_{2(\pm)}(B; t)\zeta h_{2(\mp)}(B; \zeta) - h_{2(\pm)}(B; \zeta)t h_{2(\mp)}(B; t)}{tM(\xi(t, B))(1 - B^2t^2)^{\frac{1}{2}}} \times e^{\tau/t}\frac{\zeta_0^2 - t^2}{\zeta^2 - t^2}S_{(\pm)}(x, t)\right)dt. \tag{4.21}$$

And it is often more convenient to write

$$h_{2(\pm)}(B; \zeta) = e^{-\tau/\zeta}\zeta X(-\zeta, B)H_{(\pm)}(B; \zeta). \tag{4.22}$$

Then, $H_{(\pm)}(B; \zeta)$ satisfies the Fredholm equation

$$H_{(\pm)}(B; \zeta) = -(\pm)L[H_{(\pm)}](B; \zeta) + 1, \tag{4.23a}$$

where

$$L[H_{(\pm)}](B; \zeta) = \int_0^{\alpha(B)}\frac{\mathcal{H}(B, s; s)}{s + \zeta}H_{(\pm)}(B; s)\frac{ds}{(1 - B^2s^2)^{\frac{1}{2}}}. \tag{4.23b}$$

In general, the Neumann series solutions to (4.14) and (4.23) converge rapidly. For

$$B \in C_p = (-\infty, +\infty) \cup \{i\beta: \beta \in (-\sigma, \sigma)\},$$

it can be shown that the norms

$$\|\mathfrak{L}\| = \max_{\zeta\in(0,\alpha(B))}\int_0^{\alpha(B)}\left|\frac{\mathcal{H}(B, \zeta; s)}{s + \zeta}\frac{1}{(1 - B^2s^2)^{\frac{1}{2}}}\right|ds \le e^{-\tau/\alpha(B)} \tag{4.24a}$$

and

$$\|L\| = \max_{\zeta\in(0,\alpha(B))}\int_0^{\alpha(B)}\left|\frac{\mathcal{H}(B; s; s)}{s + \zeta}\frac{1}{(1 - B^2s^2)^{\frac{1}{2}}}\right|ds \le \frac{e^{-\tau/\alpha(B)}}{X(-\alpha(B), B)}, \tag{4.24b}$$

so that for many applications the solutions to (4.12) and (4.23) are given with sufficient accuracy by the first few terms in the Neumann series. Furthermore, the truncated series need only be evaluated for $\zeta \in C_0(B)$, deformed to $C_D(B) = \{p \cdot \alpha(B): p \in (0, 1)\}$ for $B \notin C_+ \cup C_-$, and these results may be used in (4.14) and (4.23) to obtain $h_{1(\pm)}(x, B; \zeta)$, $h_{2(\pm)}(B; \zeta)$, and $H_{(\pm)}(B; \zeta)$ for all other ζ. And as shown above, it is only necessary to evaluate the Neumann series solution for $h_{2(\pm)}(B; \zeta)$ or for $H_{(\pm)}(B, \zeta)$; this result may be used in (4.21) to yield $h_{1(\pm)}(x, B; \zeta)$.

In particular, for $\tau \gg \alpha(B)$, $B \in C_p$, the Neumann series solution to (4.23) or to (4.14b) may be truncated to the first term, yielding

$$H_{(\pm)}(B; \zeta) = 1 + O(e^{-\tau/\alpha(B)}) \tag{4.25a}$$

or

$$h_{2(\pm)}(B; \zeta) = e^{-\tau/\zeta}\zeta X(-\zeta, B)[1 + O(e^{-\tau/\alpha(B)})], \tag{4.25b}$$

respectively. This result, substituted into (4.21), yields

$$h_{1(\pm)}(x, B; \zeta) = S_{(\pm)}(x, \zeta) - (\pm)\mathfrak{L}[S_{(\pm)}](x, B; \zeta) + O(e^{-\tau/\alpha(B)}), \tag{4.25c}$$

which is just the Neumann series solution to (4.14a) truncated to the second term. Substituting (4.25) into (4.10), (4.11), and (4.3) results in a relatively simple expression for $F(x, B; \gamma)$, which is easy to evaluate numerically and which is "exact" for most practical cases.

It is interesting to note that setting $B = 0$ gives the results and the corresponding functions for 1-dimensional integral transport theory in a slab.[13,14]

5. THE TRANSFORM INVERSIONS USING CONTOUR INTEGRATION: A CONVENIENT SOLUTION FOR $|\tilde{\mathbf{r}} - \tilde{\mathbf{r}}'| \gg 1/\sigma$

To evaluate $G(\mathbf{r}; \mathbf{r}')$, the results of Sec. 4 are substituted into the inversion formula (3.16) and the integrations over B and γ are performed. These integrals can both be evaluated using contour integration and the calculus of residues, yielding a relatively simple result for large radial arguments $|\tilde{\mathbf{r}} - \tilde{\mathbf{r}}'| \gg 1/\sigma$.

Suppose we define the inverse Fourier (Hankel) transform of $F(x, B; \gamma)$ as

$$\rho_3(x, y, z; \gamma) = \frac{1}{2\pi} \int_0^\infty F(x, B; \gamma) J_0(B\tilde{r}) B \, dB, \quad (5.1)$$

where $\tilde{r} = (y^2 + z^2)^{\frac{1}{2}}$ and γ is treated as a complex parameter. Before evaluating (5.1) using contour integration, we need to examine further the analyticity of $F(x, B; \gamma)$ in the B plane.

A spectral analysis[18] of the operator $\Delta_B[\cdot]$ in the B plane, i.e., an investigation of the singularities of $(I - \Delta_B)^{-1}[\cdot]$, reveals a continuous spectrum

$$C_+ \cup C_- = \{\pm i\beta : \beta \in (\sigma, \infty)\}$$

and a point spectrum restricted to

$$C_p' = (-\infty, +\infty) \cup \{i\beta : \beta \in [-\sigma, \sigma]\}.$$

For $\tau > 0$ sufficiently small, the point spectrum is empty. In other words, $F(x, B; \gamma)$ is analytic in the B plane cut by $C_+ \cup C_-$ with poles in C_p', and there exists a $\tau_{\min} > 0$ such that, for $0 < \tau < \tau_{\min}$, there are no poles. In particular, $\tau_{\min}$ satisfies (5.2) (below) implicitly with $n = 1$ and $B_n = i\sigma$, and Williams[12] obtains approximate values of $\tau_{\min}$ for $0 \leq c < 1$, by neglecting the last (nonlinear) term, $\mathfrak{U}(i\sigma, \tau_{\min})$.

Consider first the point spectrum. A detailed investigation of the denominator of $F(x, B, \gamma)$ reveals that $F(x, B, \gamma)$ has a finite number of poles for $0 < \tau < \infty$, namely, those $\pm B_n \in C_p'$, $n = 1, 2, \cdots, N$, for which the denominator of (4.11) is zero. Equivalently, these poles satisfy

$$\tau = T(B_n, n) - \mathfrak{U}(B_n, \tau), \quad n = 1, 2, \cdots, N, \quad (5.2)$$

where

$$T(B, n) = n\pi i \zeta_0(B) - 2\int_0^1 \frac{1 - \theta(t)/\pi}{1 - (t/\nu_0)^2} \frac{dt}{(\sigma^2 + B^2 t^2)^{\frac{1}{2}}} \quad (5.3)$$

and

$$\mathfrak{U}(B, \tau) = \zeta_0(B) \log [H_{(\pm)}(B; -\zeta_0)/H_{(\pm)}(B; \zeta_0)], \quad (5.4)$$

in which $(\pm) = \text{sign}\,[(-1)^{n+1}]$, $n = 1, 2, \cdots, N$.

Specifically, for $0 \leq c \leq 1$, $F(x, B; \gamma)$ has poles at $\pm B_n$, $n = 1, 2, \cdots, N$: $B_n = i\beta_n$ and $\sigma/\nu_0 < \beta_1 < \beta_2 < \cdots < \beta_N \leq \sigma$. For $c \geq 1$, $F(x, B; \gamma)$ has poles at $\pm B_n$, $n = 1, 2, \cdots, N$: $\sigma/|\nu_0| > B_1 > B_2 > \cdots > B_{n_0-1} \geq 0$, and $B_n = i\beta_n$, $n = n_0, n_0 + 1, \cdots, N$, with $0 \leq \beta_{n_0} < \beta_{n_0+1} < \cdots < \beta_N \leq \sigma$. And for a subcritical slab, $F(x, B; \gamma)$ has poles $\pm B_n$, $n = 1, 2, \cdots, N$: $B_n = i\beta_n$, $0 < \beta_1 < \beta_2 < \cdots < \beta_N \leq \sigma$. Since $\mathfrak{U}(B, \tau) = O(e^{-\tau/\alpha(B)})$, $\mathfrak{U}$ is important in (5.2) only for those poles near $\pm i\sigma$. The remaining poles can quickly be determined by plotting $T(B, n)$ versus $B \in C_p$ for $n = 1, 2, \cdots$, and then by picking off those $\hat{B}_n \approx B_n$ for which $\tau = T(\hat{B}_n, n)$. For an illustration, the general shape of $T(B, n)$ is sketched in Fig. 4 for $\nu_0 = 5$. Note that the first term of $T(B, n)$ dominates for β near σ/ν_0, so that to a fair approximation, the first few poles of $F(x, B; \gamma)$ are given by

$$\beta_n \approx [(\sigma/\nu_0)^2 + (n\pi/\tau)^2]^{\frac{1}{2}}, \quad 1 \leq n < N. \quad (5.5)$$

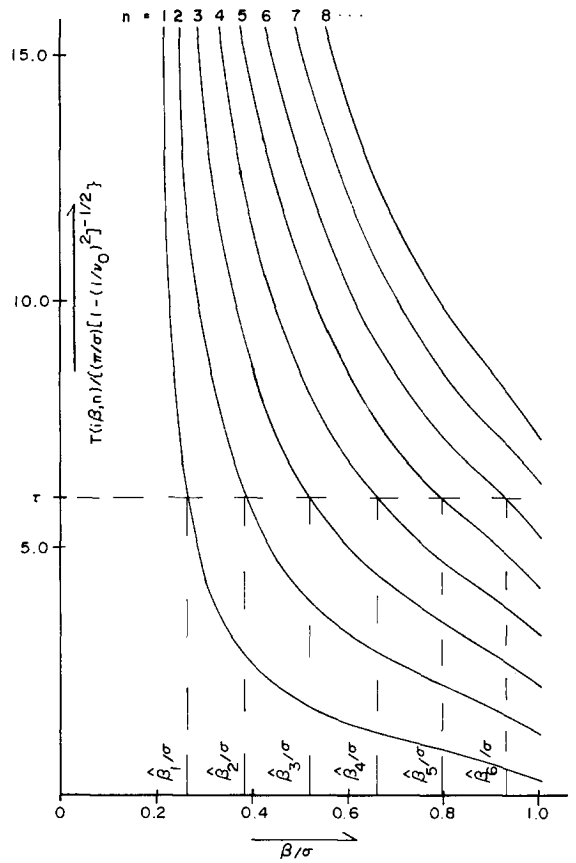

FIG. 4. A sketch of $T(i\beta, n)$ vs $\beta \in (\sigma/\nu_0, \sigma]$ for $\nu_0 = 5$, graphically determining the wide slab poles.

One further consideration is necessary before we can use contour integration to evaluate (5.1). Since

$$F(x, B, \gamma) \xrightarrow[B \to \infty]{} e^{-x\gamma} + O(e^{-\frac{1}{2}B\tau}/B^2), \quad 0 < x < \tau,$$

$$e^{-x\gamma} + O(1/B^2), \quad x = 0 \text{ or } \tau, \quad (5.6a)$$

and

$$J_0(B\tilde{r}) \xrightarrow[B \to \infty]{} O((B\tilde{r})^{-\frac{1}{2}}), \quad (5.6b)$$

part of $F(x, B; \gamma) J_0(B\tilde{r}) B$ is not integrable on $B \in (0, \infty)$. This part of (5.1) exists in the sense of a

[18] J. Lehner and G. M. Wing, Commun Pure Appl. Math. 8, 217 (1955).

generalized function and must be evaluated as such. For example,

$$\frac{1}{2\pi}\int_0^\infty J_0(B\tilde{r})B\,dB = \delta(y)\delta(z). \tag{5.7}$$

Thus, it is convenient to define

$$F_0(x, B; \gamma) = F(x, B; \gamma) - [1 + (c\sigma/B)\tan^{-1}(B/\sigma)]e^{-x\gamma}. \tag{5.8}$$

Then,

$$F_0(x, B; \gamma)J_0(B\tilde{r})B \to O((B^3\tilde{r})^{-\frac{1}{2}}), \tag{5.9}$$

which is integrable on $B \in (0, \infty)$, and we can write

$$\rho_3(x, y, z; \gamma) = e^{-x\gamma}\delta(y)\delta(z) + \frac{c\sigma}{2\pi\tilde{r}}K_{i1}(\sigma\tilde{r})e^{-x\gamma} + \frac{1}{2\pi}\int_0^\infty F_0(x, B; \gamma)J_0(B\tilde{r})B\,dB, \tag{5.10}$$

where K_{i1} is the Bickley function[19]:

$$\frac{1}{\tilde{r}}K_{i1}(\sigma\tilde{r}) = \int_\sigma^\infty K_0(\beta\tilde{r})\,d\beta = \int_0^\infty \tan^{-1}\left(\frac{B}{\sigma}\right)J_0(B\tilde{r})\,dB, \tag{5.11}$$

in which K_0 is the modified Bessel function.[16] Since $(c\sigma/B)\tan^{-1}(B/\sigma)$ is analytic in the B plane cut by $C_+ \cup C_-$, $F_0(x, B; \gamma)$ is analytic in the B plane cut by $C_+ \cup C_-$, with the same poles as $F(x, B; \gamma)$.

To evaluate the integral in (5.10), consider an odd representation of the ordinary Bessel function,[16]

$$J_0(B\tilde{r}) = \frac{1}{\pi i}\int_1^\infty \frac{e^{iB\tilde{r}t}}{(t^2-1)^{\frac{1}{2}}}\,dt - \frac{1}{\pi i}\int_{-\infty}^{-1}\frac{e^{iB\tilde{r}t}}{(t^2-1)^{\frac{1}{2}}}\,dt, \tag{5.12}$$

for $B\tilde{r} \in (0, \infty)$, and treat the integrals as contour integrations in the complex t plane. Deforming the contours $t \in (1, +\infty)$ and $t \in (-\infty, -1)$ to lift them slightly above the real axis, we can substitute (5.12) into the last term of (5.10) and use Fubini's theorem to invert the order of integration:

$$\frac{1}{2\pi}\int_0^\infty F_0(x, B; \gamma)J_0(B\tilde{r})B\,dB = \frac{1}{2\pi^2 i}\int_1^\infty \frac{dt}{(t^2-1)^{\frac{1}{2}}}\left(\int_0^\infty F_0(x, B; \gamma)e^{iB\tilde{r}t}B\,dB - \int_0^\infty F_0(x, B; \gamma)e^{-iB\tilde{r}t}B\,dB\right). \tag{5.13}$$

Then, using Cauchy's theorem and the contours

[19] W. G. Bickley and J. Naylor, Phil. Mag. 20, 343 (1935).

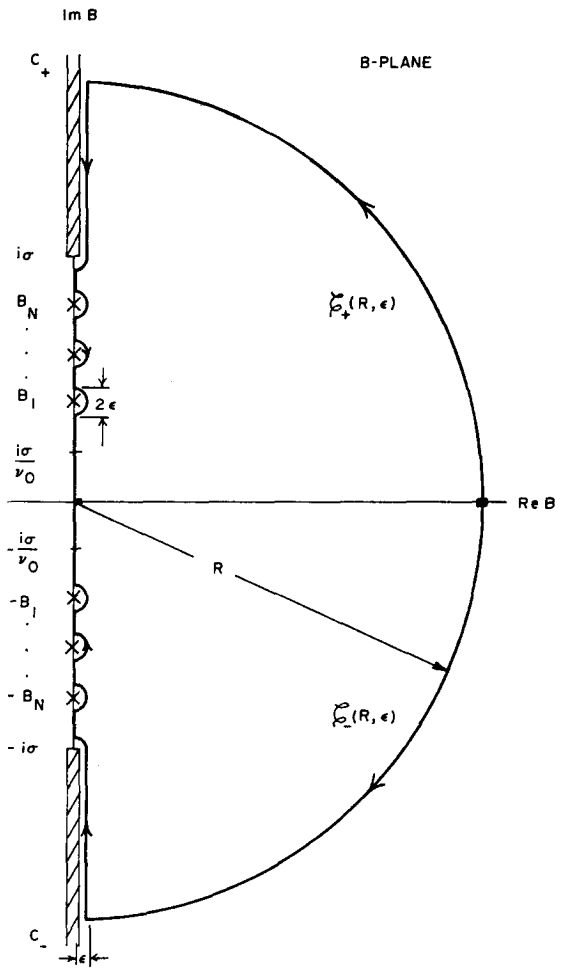

FIG. 5. The Hankel transform inversion contours for $F(x, B; \gamma)$.

$\mathcal{C}_+(R, \epsilon)$ and $\mathcal{C}_-(R, \epsilon)$ illustrated in Fig. 5, we obtain

$$\frac{1}{2\pi}\int_0^\infty F_0(x, B; \gamma)J_0(B\tilde{r})B\,dB = \lim_{\substack{R\to\infty\\ \epsilon\to 0}}\left[\frac{-1}{2\pi^2 i}\int_1^\infty \frac{dt}{(t^2-1)^{\frac{1}{2}}}\left(\int_{\mathcal{C}_+(R,\epsilon)} F_0(x, B; \gamma)e^{iB\tilde{r}t}B\,dB - \int_{\mathcal{C}_-(R,\epsilon)} F_0(x, B; \gamma)e^{-iB\tilde{r}t}B\,dB\right)\right]$$
$$= \frac{1}{\pi}\sum_{n=1}^N K_0(\beta_n\tilde{r})B_n\mathcal{R}_n(x; \gamma) + \frac{1}{2\pi^2 i}\int_\sigma^\infty \mathcal{F}(x, \beta, \gamma)K_0(\beta\tilde{r})\beta\,d\beta - \frac{c\sigma}{2\pi\tilde{r}}K_{i1}(\sigma\tilde{r})e^{-x\gamma}, \tag{5.14}$$

where

$$\mathcal{F}(x, \beta; \gamma) = \lim_{\epsilon\to 0}[F(x, i\beta - \epsilon; \gamma) - F(x, i\beta + \epsilon; \gamma)]$$

for $\beta \in (\sigma, \infty)$ and where

$$\mathcal{R}_n(x, \gamma) = \lim_{B\to B_n}[(B - B_n)F(x, B; \gamma)]$$

is the residue of $F(x, B; \gamma)$ at the pole $B_n = i\beta_n$, $n = 1, 2, \cdots, N$. Substituting (5.14) into (5.10) and using the results of Sec. 4 to evaluate $\mathcal{R}_n(x; \gamma)$, we obtain

$$\rho_3(x, y, z; \gamma) = e^{-x\gamma}\delta(y)\delta(z) + \frac{1}{2\pi^2 i}\int_\sigma^\infty \mathcal{F}(x, \beta; \gamma)K_0(\beta\tilde{r})\beta\, d\beta + \sum_{n=1}^{N}\frac{\mathcal{N}_n(\gamma)}{\mathfrak{D}_n}K_0(\beta_n\tilde{r})\Phi_n(x), \quad (5.15)$$

where

$$\mathcal{N}_n(\gamma) = (-1)^n \times \frac{h_{2(\pm)}(B_n; \gamma^{-1}) + (\pm)h_{2(\pm)}(B_n; -\gamma^{-1})e^{-\gamma\tau}}{\Lambda(\xi(\gamma^{-1}, B_n))}, \quad (5.16)$$

$$\mathfrak{D}_n = (\pi/\lambda_n)\,|H_{(\pm)}(B_n; \zeta_0(B_n))|^2 \cdot [D_n^\infty + D_n^\tau], \quad (5.17)$$

in which

$$\lambda_n = i/\zeta_0(B_n) = [\beta_n^2 - (\sigma/\nu_0)^2]^{\frac{1}{2}}, \quad (5.18)$$

$$(\pm) = \text{sign}\,[(-1)^{n+1}], \quad (5.19)$$

$$D_n^\infty = \frac{n\pi}{\lambda_n^2} + 2\lambda_n\int_0^1 \frac{1 - \theta(t)/\pi}{1 - (t/\nu_0)^2}\frac{t^2\, dt}{(\sigma^2 + B_n^2 t^2)^{\frac{3}{2}}}, \quad (5.20)$$

$$D_n^\tau = \frac{1}{\beta_n}\frac{1}{\zeta_0(B_n)}\frac{\partial}{\partial B}[\mathcal{U}(B, \tau)]_{B=B_n} = \frac{\tau - T(B_n, n)}{\lambda_n} + \frac{\exp\{i[\tau - T(B_n, n)]\lambda_n\}}{\beta_n} \times \frac{\partial}{\partial B}\left(\frac{H_{(\pm)}(B; -\zeta_0(B))}{H_{(\pm)}(B; \zeta_0(B))}\right)_{B=B_n}, \quad (5.21)$$

and where

$$\Phi_n(x) = a_n \cos[\lambda_n(\tfrac{1}{2}\tau - x)] + b_n \sin[\lambda_n(\tfrac{1}{2}\tau - x)] - \int_0^{\alpha(B_n)} A_n(\nu)[e^{-x/\nu} - (-1)^n e^{-(\tau - x)/\nu}]\, d\nu, \quad (5.22)$$

in which

$$a_n = Q_n(-1)^{\frac{1}{2}(n-1)}, \quad n \text{ odd}, \quad n = 1, 2, \cdots, N,$$
$$a_n = 0, \quad n \text{ even}, \quad (5.23)$$
$$b_n = 0, \quad n \text{ odd}, \quad n = 1, 2, \cdots, N,$$
$$b_n = Q_n(-1)^{\frac{1}{2}(n-2)}, \quad n \text{ even}, \quad (5.24)$$

$$Q_n = [(2u)^{\frac{1}{2}}/\lambda_n]\,|H_{(\pm)}(B_n; \zeta_0(B_n))|, \quad (5.25)$$

$$u = (\sigma^2/\nu_0^2)(\nu_0^2 - 1)/[1 - (1 - c)\nu_0^2], \quad (5.26)$$

and

$$A_n(\nu) = \tfrac{1}{2}c\sigma\frac{X(-\nu, B_n)}{M(\xi(\nu, B_n))}\frac{H_{(\pm)}(B_n, \nu)}{(1 - B_n^2\nu^2)^{\frac{1}{2}}}. \quad (5.27)$$

To finally obtain $G(\mathbf{r}; \mathbf{r}')$, we need only perform the Laplace inversion

$$G(\mathbf{r}; \mathbf{r}') = \frac{1}{2\pi i}\int_{-i\infty}^{+i\infty}\rho_3(x, y - y', z - z'; \gamma)e^{x'\gamma}\, d\gamma, \quad (5.28)$$

for $0 \le x, x' \le \tau$ and $-\infty < y, y', z, z' < +\infty$, using contour integration and the calculus of residues. Recall from Sec. 4 that, if $\zeta = 1/\gamma$, then $X(1/\gamma, B)$ is analytic in the γ plane cut by $\tilde{C}_0(B) = \{(B^2 + \eta^2)^{\frac{1}{2}}: \eta \in (\sigma, \infty)\}$ and has no zeros or poles. On the other hand,

$$\Lambda\left(\xi\left(\frac{1}{\gamma}, B\right)\right) = 1 - \tfrac{1}{2}c\sigma\int_{\tilde{C}_0(B)}\left(\frac{1}{s - \gamma} + \frac{1}{s + \gamma}\right)\frac{ds}{(s^2 - B^2)^{\frac{1}{2}}} \quad (5.29)$$

is analytic in the γ plane cut by $\tilde{C}_0(B) \cup \tilde{C}_0^-(B)$, where

$$\tilde{C}_0^-(B) = \{-(B^2 + \eta^2)^{\frac{1}{2}}: \eta \in (\sigma, \infty)\},$$

with zeros at $\pm\gamma_0(B)$, where

$$\gamma_0(B) = 1/\zeta_0(B) = [B^2 + (\sigma/\nu_0)^2]^{\frac{1}{2}}.$$

Since $H_\pm(B; 1/\gamma)$ is analytic in the γ plane cut by $\tilde{C}_0^-(B)$, substituting (4.22) into (5.16) reveals that $\mathcal{N}_n(\gamma)$ is analytic in the γ plane cut by $\tilde{C}_0(B) \cup \tilde{C}_0^-(B)$, with poles at $\pm\gamma_0(B)$.

Then, using Cauchy's theorem and the contours Γ_+ and Γ_- illustrated in Fig. 6,

$$\frac{1}{2\pi i}\int_{-i\infty}^{i\infty}\mathcal{N}_n(\gamma)e^{x'\gamma}\, d\gamma = -\frac{(-1)^n}{2\pi i}\int_{\Gamma_+}\frac{X(-\gamma^{-1}, B_n)H_{(\pm)}(B_n; \gamma^{-1})e^{-(\tau - x')\gamma}\, d\gamma}{\gamma\Lambda(\xi(\gamma^{-1}, B_n))} - \frac{1}{2\pi i}\int_{\Gamma_-}\frac{X(-\gamma^{-1}, B_n)H_{(\pm)}(B_n; -\gamma^{-1})e^{x'\gamma}\, d\gamma}{\gamma\Lambda(\xi(\gamma^{-1}, B_n))} = \Phi_n(x'). \quad (5.30)$$

The use of (5.30) and (3.14) in (5.28) and (5.15) results in the following expression for $G(\mathbf{r}; \mathbf{r}')$:

$$G(\mathbf{r}; \mathbf{r}') = \delta^3(\mathbf{r} - \mathbf{r}') + \frac{1}{2\pi^2 i}\int_\sigma^\infty \mathcal{E}(x, x'; \beta)K_0(\beta\,|\tilde{\mathbf{r}} - \tilde{\mathbf{r}}'|)\beta\, d\beta + \sum_{n=1}^{N}\frac{K_0(\beta_n\,|\tilde{\mathbf{r}} - \tilde{\mathbf{r}}'|)}{\mathfrak{D}_n}\Phi_n(x)\Phi_n(x'), \quad (5.31)$$

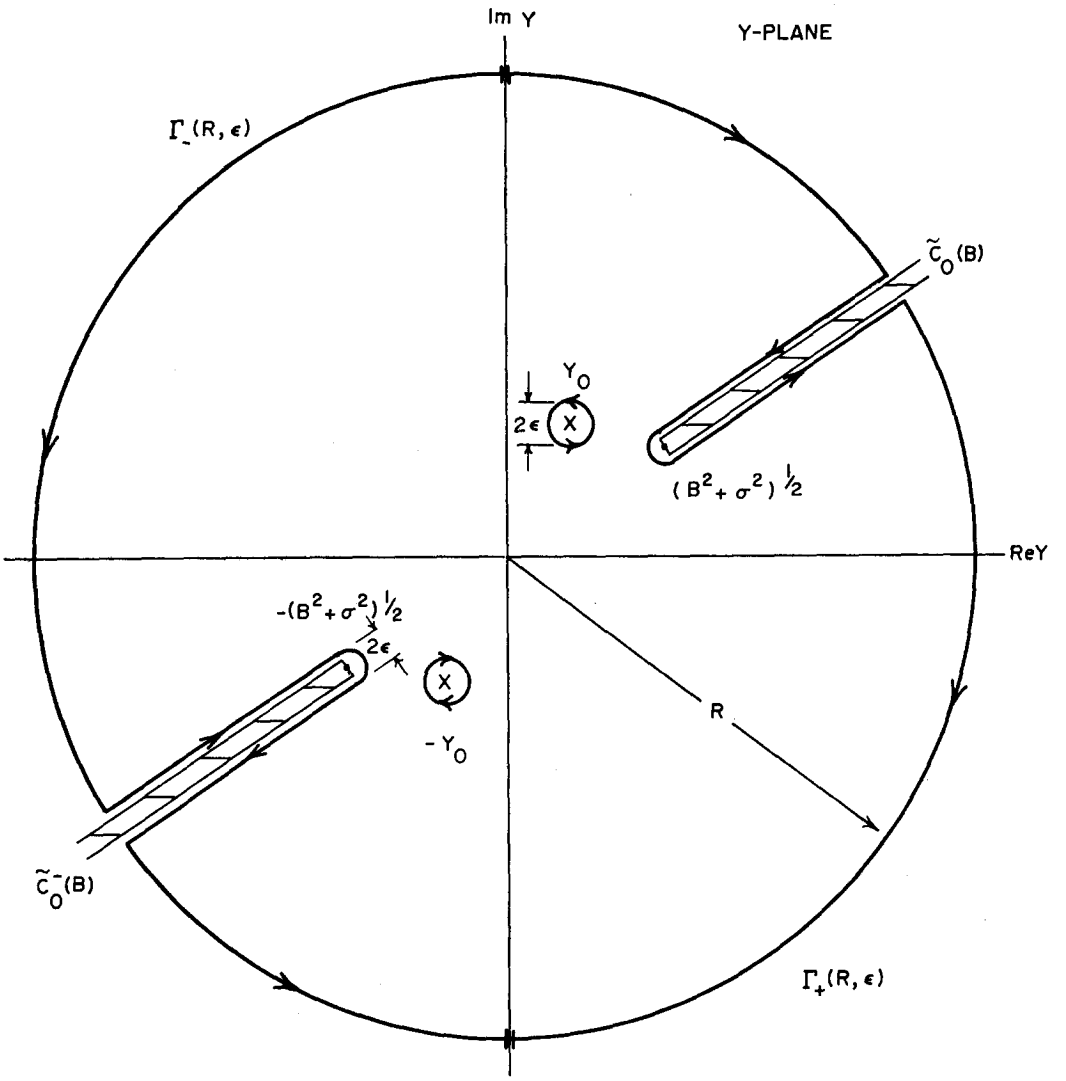

FIG. 6. The Laplace transform inversion contours for terms comprising $F(x, B; \gamma)$.

where

$$\mathcal{E}(x, x'; \beta) = \lim_{\substack{\epsilon\to 0\\ \epsilon>0}} [\mathcal{G}(x, i\beta - \epsilon; x') - \mathcal{G}(x, i\beta + \epsilon; x')],$$

where $\mathcal{D}_n$ is given by (5.17) and where $\Phi_n(x)$ is given by (5.22).

It is interesting to note that $\Phi_n(x)$ is an eigenfunction of the 1-dimensional integral operator $\Delta_{B_n}[\cdot]$:

$$\Phi_n(x) = \Delta_{B_n}[\Phi_n](x) = \tfrac{1}{2}c\sigma\int_0^\tau K(|x - \hat{x}|; B_n^2)\Phi_n(\hat{x})\, d\hat{x}. \tag{5.32}$$

Thus, (5.31) represents a general eigenfunction expansion over the point spectrum and over the continuous spectrum of $\Delta_B[\cdot]$.

Since

$$K_0(\beta\tilde{r}) \xrightarrow[\tilde{r}\to\infty]{} O(e^{-\beta\tilde{r}}\tilde{r}^{-\frac{1}{2}}), \tag{5.33}$$

the third term of (5.31) dominates for $|\tilde{\mathbf{r}} - \tilde{\mathbf{r}}'| \gg 1/\sigma$, and we obtain the following relatively simple expression:

$$G(\mathbf{r};\mathbf{r}') = \sum_{n=1}^{N} \frac{K_0(\beta_n|\tilde{\mathbf{r}} - \tilde{\mathbf{r}}'|)}{\mathcal{D}_n}\Phi_n(x)\Phi_n(x') + O(e^{-\sigma|\tilde{\mathbf{r}}-\tilde{\mathbf{r}}'|}), \tag{5.34}$$

for $|\tilde{\mathbf{r}} - \tilde{\mathbf{r}}'| \gg 1/\sigma$. Furthermore, in the case of a "wide slab," the elements of (5.34) reduce to particularly simple closed forms. For $\tau \gg \alpha(i\beta_n)$, the approximation (4.25a) substituted into expressions (5.2) and (5.17)–(5.27) yields the following:

$$\beta_n = \hat{\beta}_n + O(e^{-\tau/\alpha(i\hat{\beta}_n)}), \tag{5.35a}$$

where (see Fig. 4)

$$\tau = T(i\hat{\beta}_n, n); \tag{5.35b}$$

$$\lambda_n = \hat{\lambda}_n + O(e^{-\tau/\alpha(i\hat{\beta}_n)}), \tag{5.36a}$$

where

$$\hat{\lambda}_n = [\hat{\beta}_n^2 - (\sigma/\nu_0)^2]^{\frac{1}{2}}; \tag{5.36b}$$

$$\mathfrak{D}_n = (\pi/\hat{\lambda}_n)\hat{D}_n^\infty + O(e^{-\tau/\alpha(i\hat{\beta}_n)}), \tag{5.37a}$$

where

$$\hat{D}_n^\infty = \frac{n\pi}{\hat{\lambda}_n^2} + 2\hat{\lambda}_n \int_0^1 \frac{1-\theta(t)/\pi}{1-(t/\nu_0)^2} \frac{t^2\,dt}{(\sigma^2 - \hat{\beta}_n^2 t^2)^{\frac{3}{2}}}; \tag{5.37b}$$

and

$$\Phi_n(x) = \hat{\Phi}_n(x) + O(e^{-\tau/\alpha(i\hat{\beta}_n)}), \tag{5.38a}$$

where

$$\hat{\Phi}_n(x) = \frac{(2u)^{\frac{1}{2}}}{\hat{\lambda}_n}\hat{\psi}_n(x) - \tfrac{1}{2}c\sigma \int_0^{\alpha(i\hat{\beta}_n)} \frac{X(-\nu; i\hat{\beta}_n)}{M(\xi(\nu, i\hat{\beta}_n))} \times [e^{-x/\nu} - (-1)^n e^{-(\tau-x)/\nu}] \frac{d\nu}{(1+\hat{\beta}_n^2\nu^2)^{\frac{1}{2}}}, \tag{5.38b}$$

in which

$$\hat{\psi}_n(x) = (-1)^{\frac{1}{2}(n-1)} \cos[\hat{\lambda}_n(\tfrac{1}{2}\tau - x)], \quad n \text{ odd}, \quad n = 1, 2, \cdots, N,$$
$$= (-1)^{\frac{1}{2}(n-2)} \sin[\hat{\lambda}_n(\tfrac{1}{2}\tau - x)], \quad n \text{ even}. \tag{5.38c}$$

To note the limitations of simple diffusion theory, compare the transport-theory solution (5.31) to the solution $G_{\text{diff}}(\mathbf{r}; \mathbf{r}')$, obtained by using the diffusion approximation in the transport equation:

$$G_{\text{diff}}(\mathbf{r}; \mathbf{r}') = \sum_{m=1}^{\infty} \frac{K_0(d_m|\tilde{\mathbf{r}} - \tilde{\mathbf{r}}'|)}{3\pi\sigma_a(\tau + 2l)} \Psi_m(x)\Psi_m(x'), \tag{5.39}$$

where $d_m = \{3\sigma_a\sigma + [m\pi/(\tau + 2l)]^2\}^{\frac{1}{2}}$, σ_a is the absorption cross section, $l \approx 0.7/\sigma$ is the extrapolation distance, and $\Psi_m(x) = \sin[m\pi(x + l)/(\tau + 2l)]$ is an eigenfunction of the 1-dimensional diffusion operator,

$$\frac{d^2\Psi_m(x)}{dx^2} = -\left(\frac{m\pi}{\tau + 2l}\right)^2 \Psi_m(x). \tag{5.40}$$

Although both (5.31) and (5.39) are eigenfunction expansions, diffusion theory predicts an infinite point spectrum for all slab widths, while transport theory yields a continuous spectrum plus a finite point spectrum which is empty for thin slabs. For $0 < \tau < \tau_{\min}$, only the continuum expansion [second term of (5.31)] remains. And, as is typical in 1-dimensional problems, the transport-theory solution includes an "end correction" [third term of (5.22) that is important near the boundaries $x = 0$ or τ] which is not found in diffusion theory.

Finally, let us compare the dominant buckling modes of transport theory with those of diffusion theory in the normal direction [λ_1 vs $\pi/(\tau + 2l)$] and in the radial direction (β_1 vs d_1). Using $\beta_1 \approx [(\sigma/\nu_0)^2 + (n\pi/\tau)^2]^{\frac{1}{2}}$, Eq. (5.5), and $\nu_0^2 \approx 1/3(1 - c) = \sigma/3\sigma_a$ (for c near 1), we see that the fundamental diffusion and transport modes are approximately equal only in a highly scattering, very wide slab.

6. THE TRANSFORM INVERSIONS BY DIRECT METHODS: A CONVENIENT SOLUTION FOR $|\tilde{\mathbf{r}} - \tilde{\mathbf{r}}'| \lesssim 1/\sigma$

For $B \in C_+ \cup C_-$, the Neumann series solution to (4.14) apparently converges rather slowly, so that $\mathcal{E}(x, x'; \beta)$ is difficult to determine accurately. Hence, there is little advantage in using (5.31) instead of (3.1) to evaluate $G(\mathbf{r}; \mathbf{r}')$ for $|\tilde{\mathbf{r}} - \tilde{\mathbf{r}}'| \lesssim 1/\sigma$. However, we can develop an expression, which is more suitable than either (3.1) or (5.31), for evaluating $G(\mathbf{r}; \mathbf{r}')$ for small and intermediate radial arguments. To accomplish this, we first perform the Laplace inversion in γ using contour integration. Then, we analytically invert that part of the Fourier inversion integral which decays slowly as $B \to \infty$, leaving the rapidly converging part for numerical integration.

To evaluate (3.14), we first note that, although $F(x, B; \gamma)$ is analytic in the γ plane for all $|\gamma| < \infty$ and approaches a definite limit for $\gamma \to \infty$ in the right half-plane, the individual terms in the expressions (4.7) or (4.10) are not analytic for all γ. Therefore, one can integrate $F(x, B; \gamma)$ term by term, using (4.7), or (4.3) and (4.10), and the techniques of contour integration and calculus of residues.

In particular, consider (4.7), the singular integral equation satisfied by $F(x, B; \gamma)$, and divide through by $\Lambda(\xi(\gamma^{-1}, B))$:

$$F(x, B; \gamma) = \frac{e^{-x\gamma}}{\Lambda(\xi(\gamma^{-1}, B))} + \tfrac{1}{2}c\sigma \int_{\tilde{C}_0(B)} \frac{F(x, B; s)}{\Lambda(\xi(\gamma^{-1}, B))(\gamma - s)} \frac{ds}{(s^2 - B^2)^{\frac{1}{2}}} - e^{-\tau\gamma}\tfrac{1}{2}c\sigma \int_{\tilde{C}_0(B)} \frac{F(\tau - x, B; s)}{\Lambda(\xi(\gamma^{-1}, B))(\gamma + s)} \frac{ds}{(s^2 - B^2)^{\frac{1}{2}}}. \tag{6.1}$$

Referring to (5.29), each term of (6.1) is analytic in the γ plane cut by $\tilde{C}_0(B) \cup \tilde{C}_n^-(B)$ and has poles at $\pm\gamma_0(B)$.

Now substitute (6.1) into (3.14) and refer to Fig. 6. In the first term, we use the contour $\Gamma_+(R, \epsilon)$ for $\tau \geq x > x' \geq 0$ and use $\Gamma_-(R, \epsilon)$ for $\tau \geq x' > x \geq 0$. In the second term, we use $\Gamma_-(R, \epsilon)$ and, in the third term, we use $\Gamma_+(R, \epsilon)$. Letting $R \to \infty$ and $\epsilon \to 0$, we obtain the following result:

$$\mathcal{G}(x, B; x') = \mathcal{G}_\infty(x, B; x') - \mathcal{G}_0(x, B; x') - \mathcal{G}_0(\tau - x, B; \tau - x') \tag{6.2}$$

where [see Eqs. (5.26) and (4.12)–(4.20)]

$$\mathcal{G}_\infty(x, B; x') = \delta(x - x') + P(|x - x'|, B; 0) \quad (6.3)$$

and

$$\mathcal{G}_0(x, B; x') = \tfrac{1}{2}c\sigma\int_0^{\alpha(B)} F\left(x, B; \frac{1}{s}\right)P(x', B; s)\frac{ds}{(1 - B^2s^2)^{\frac{1}{2}}}, \quad (6.4)$$

in which

$$P(x', B; s) = \frac{u\zeta_0^2(B)e^{-x'/\zeta_0(B)}}{s + \zeta_0(B)} + \tfrac{1}{2}c\sigma\int_0^{\alpha(B)} \frac{e^{-x'/t}}{M(\xi(t, B))(s + t)}\frac{dt}{(1 - B^2t^2)^{\frac{1}{2}}}. \quad (6.5)$$

One can arrive at an equivalent expression by substituting (4.3), (4.10), and (4.11) into (3.14) and by using the contours illustrated in Fig. 6.

Finally, the use of (6.2) in (3.6) and (3.8) yields the following expression for $G(\mathbf{r}; \mathbf{r}')$:

$$\begin{aligned} G(x, y, z; x', y', z') &= G_\infty(x, y, z; x', y', z') \\ &\quad - G_0(x, y, z; x', y', z') \\ &\quad - G_0(\tau - x, y, z; \tau - x', y', z'), \end{aligned} \quad (6.6)$$

where[20] we have evaluated

$$\begin{aligned} G_\infty(\mathbf{r}; \mathbf{r}') &= \frac{1}{2\pi}\int_0^\infty \mathcal{G}_\infty(x, B; x')J_0(B\,|\tilde{\mathbf{r}} - \tilde{\mathbf{r}}'|)B\,dB \\ &= \delta^3(\mathbf{r} - \mathbf{r}') + \frac{u}{2\pi}\frac{\exp(-\sigma\,|\mathbf{r} - \mathbf{r}'|\,v_0^{-1})}{|\mathbf{r} - \mathbf{r}'|} \\ &\quad + \frac{c\sigma^2}{4\pi}\frac{1}{|\mathbf{r} - \mathbf{r}'|}\int_0^1 \frac{\exp(-\sigma\,|\mathbf{r} - \mathbf{r}'|\,t^{-1})}{M(t)}\frac{dt}{t^2}, \end{aligned} \quad (6.7)$$

and where

$$\begin{aligned} G_0(\mathbf{r}; \mathbf{r}') &= \frac{1}{2\pi}\int_0^\infty \mathcal{G}_0(x, B; x')J_0(B\,|\tilde{\mathbf{r}} - \tilde{\mathbf{r}}'|)B\,dB \\ &= \frac{c\sigma}{4\pi}\int_0^\infty J_0(B\,|\tilde{\mathbf{r}} - \tilde{\mathbf{r}}'|)B\Bigg\{\int_\sigma^\infty F(x, B; (s^2 + B^2)^{\frac{1}{2}}) \\ &\quad \times \Bigg[\frac{u}{[B^2 + (\sigma/v_0)^2]^{\frac{1}{2}}}\frac{\exp\{-x'[B^2 + (\sigma/v_0)^2]^{\frac{1}{2}}\}}{(B^2 + s^2)^{\frac{1}{2}} + [B^2 + (\sigma/v_0)^2]^{\frac{1}{2}}} \\ &\quad + \tfrac{1}{2}c\sigma\int_\sigma^\infty \frac{\exp[-x'(B^2 + t^2)^{\frac{1}{2}}]}{(B^2 + s^2)^{\frac{1}{2}} + (B^2 + t^2)^{\frac{1}{2}}}\frac{dt}{M(\sigma/t)(B^2 + t^2)^{\frac{1}{2}}}\Bigg] \\ &\quad \times \frac{ds}{(B^2 + s^2)^{\frac{1}{2}}}\Bigg\}\,dB. \end{aligned} \quad (6.8)$$

[20] K. M. Case and P. F. Zweifel, *Linear Transport Theory* (Addison-Wesley Publ. Co., Reading, Mass., 1967).

$G_\infty(\mathbf{r}; \mathbf{r}')$ is the point-uncollided-source Green's function for an infinite medium [$G_\infty(\mathbf{r}; \mathbf{r}')$ satisfies (2.3) with the "0 to τ" limits of integration in $\hat{x}$ extended to "$-\infty$ to $+\infty$"], while the G_0 are the boundary correction terms. For small[21] $|\tilde{r} - \tilde{r}'|$ $G_0(x, y, z; x', y', z')$ and $G_0(\tau - x, y, z; \tau - x', y', z')$ are significant in (6.6) for x and/or x' near 0 and τ, respectively, because by (4.1),

$$F(x, B; (s^2 + B^2)^{\frac{1}{2}}) \propto O(\exp[-x(B^2 + s^2)^{\frac{1}{2}}]), \quad (6.9)$$

for $B \in (0, \infty)$ and $s \in (\sigma, \infty)$, and because of the exponential terms $\exp\{-x'[B^2 + (\sigma/v_0)^2]^{\frac{1}{2}}\}$ and

$$\exp[-x'(B^2 + t^2)^{\frac{1}{2}}]$$

in (6.8).

For x' and x not both zero, the integrals in (6.8) can be shown to converge absolutely, and that expression can be used to evaluate $G_0(\mathbf{r}; \mathbf{r}')$ numerically. Naturally, the convergence is more rapid the farther x and/or x' are from 0. For $x = x' = 0$, it is not evident that the integrals in (6.8) are absolutely convergent, so it may be necessary to substitute (5.8) into (6.8). The resulting integrals that do not converge absolutely can be evaluated analytically, while the integrals involving $F_0(x, B; (s^2 + B^2)^{\frac{1}{2}})$ converge absolutely and can be evaluated numerically. With respect to the boundary $x, x' = \tau$, the same observations are true in evaluating $G_0(\tau - x, y, z; \tau - x', y', z')$.

For the purpose of numerical integration, it is useful to note that the approximations (4.25) can be used to put the expression for $F(x, B; (s^2 + B^2)^{\frac{1}{2}})$ into simple closed form. Furthermore, even for thin slabs, these approximations are accurate for B sufficiently large so that $B \in \mathcal{B} = \{B' \in (0, \infty): \tau \gg \alpha(B')\}$.

Therefore, for $|\mathbf{r} - \mathbf{r}'| \lesssim 1/\sigma$, or when $0 < \tau < \tau_{\min}$, expressions (6.6)–(6.8) are generally much more suitable than either (5.31) or (3.1) for numerically evaluating $G(\mathbf{r}; \mathbf{r}')$. In the special case that c or τ is very small, (3.1) might be more efficient.

7. SOME ADDITIONAL RESULTS: THE PHYSICAL SIGNIFICANCE OF ρ_3, F, AND $\mathcal{G}$

To obtain the solution to (2.1) for any specific uncollided density $S(\mathbf{r})$, we need only use the results of (5.34) and (6.6) in (2.5). However, in the process of solving for $G(\mathbf{r}; \mathbf{r}')$, we have also obtained the solutions to (2.1) for some physically significant uncollided sources.

A. Normally Incident Beams

In particular, referring to (5.11) and (3.15), we see that $\rho_3(x, y - y', z - z'; \gamma)$ satisfies (2.1) with $S(\mathbf{r}) = \delta(y - y')\delta(z - z')e^{-x\gamma}$, where γ is a free parameter.

[21] As $|\tilde{r} - \tilde{r}'|$ increases, so does $(G_{00} - G)/G$ for all $x, x' \in [0, \tau]$.

For example, $\rho_3(x, y-y', z-z'; \sigma)$ is the neutron density at (x, y, z) from a pencil beam normally incident to the slab at $(0, y', z')$, and is therefore the Green's function for all problems involving beams normally incident to a slab. Likewise, referring to (2.6), $[\rho_3(x, y-y', z-z'; 0) - \delta(y-y')\delta(z-z')]/c\sigma$ is the neutron density at (x, y, z) from an isotropic line source normally incident to the slab at $y = y'$ and $z = z'$ and in the slab $x \in [0, \tau]$.

By appropriately adjusting the free parameter γ, one can think of a variety of other problems for which $\rho_3(x, y, z; \gamma)$ is the solution. In particular, the solution to an interesting "pseudo-two-group" transport problem in a slab can be written in terms of ρ_3. That is, suppose one considers a particle, such as a neutron, that has no charge and that interacts weakly with other free particles of its kind. Consider the transport of this particle in a homogeneous slab (Fig. 1), and suppose the particle physics is described by the following model:

(1) The velocity of all uncollided particles is a constant v_0, while the velocity of all particles which have had at least one collision is a constant v.

(2) The mean free path for a first collision is $1/\gamma_0$, while the mean free path for all succeeding collisions is $1/\sigma$.

(3) For every first collision there are c_0 secondaries emitted isotropically, while for every subsequent collision there are c secondaries emitted isotropically.

Then, the steady-state particle density $N(x, y-y', z-z')$, from a pencil beam of these particles normally incident to the slab at $(0, y', z')$, is simply

$$\begin{aligned} N(x, y-y', z-z') &= \frac{v_0 c_0 \gamma_0}{vc\sigma}[\rho_3(x, y-y', z-z'; \gamma_0) \\ &\quad - \delta(y-y')\delta(z-z')e^{-x\gamma_0}] \\ &\quad + \delta(y-y')\delta(x-x')e^{-x\gamma_0}. \end{aligned} \tag{7.1}$$

This solution might have some application in high-energy neutron, or gamma, shielding problems.

To evaluate $\rho_3(x, y, z; \gamma)$ for any γ, refer to the equations of Sec. 5. For $|\tilde{\mathbf{r}} - \tilde{\mathbf{r}}'| \gg 1/\sigma$, we can use (5.15) to obtain

$$\begin{aligned} &\rho_3(x, y-y', z-z'; \gamma) \\ &\quad = \sum_{n=1}^{N} \frac{\mathcal{N}_n(\gamma)}{\mathfrak{D}_n} K_0(\beta_n |\tilde{\mathbf{r}} - \tilde{\mathbf{r}}'|)\Phi_n(x) + O(e^{-\sigma|\tilde{\mathbf{r}}-\tilde{\mathbf{r}}'|}), \end{aligned} \tag{7.2}$$

where $\mathcal{N}_n(\gamma)$, $\mathfrak{D}_n$, and $\Phi_n(x)$ are given by (5.16)–(5.27). When $\tau \gg \alpha(i\beta_n)$, the approximations (4.25) and (5.35)–(5.38) can be used to reduce (7.2) to a simple, closed form.

To evaluate $\rho_3(x, y-y', z-z'; \gamma)$ for $|\tilde{\mathbf{r}} - \tilde{\mathbf{r}}'| \lesssim 1/\sigma$ or when $0 < \tau < \tau_{\min}$, one can use (5.10) and evaluate the last term numerically, using approximations (4.25) for $B \in \mathfrak{B}$. However, if $0 \le c < 1$ and $\operatorname{Re}\gamma > -\sigma/v_0$, it is more convenient to define

$$\begin{aligned} &F_1(x, B; \gamma) \\ &= F(x, B; \gamma) - \frac{\exp(-x\gamma)}{\Lambda(\xi(\gamma^{-1}, B))} - \frac{u\zeta_0(B)\exp(-x/\zeta_0(B))}{\gamma - [\zeta_0(B)]^{-1}} \\ &\quad - \frac{c\sigma}{2\gamma}\int_0^{\alpha(B)} \frac{\exp(-x/s)}{s - 1/\gamma} \frac{ds}{M(\xi(s, B))(1 - B^2 s^2)^{\frac{1}{2}}}. \end{aligned} \tag{7.3}$$

Then,

$$\begin{aligned} &\rho_3(x, y-y', z-z'; \gamma) \\ &\quad = \rho_{3\infty}(x, y-y', z-z'; \gamma) \\ &\qquad + \frac{1}{2\pi}\int_0^\infty F_1(x, B; \gamma) J_0(B|\tilde{\mathbf{r}} - \tilde{\mathbf{r}}'|) B\, dB, \end{aligned} \tag{7.4}$$

where

$$\begin{aligned} &\rho_{3\infty}(x, y-y', z-z'; \gamma) \\ &\quad = w(x)\delta(y-y')\delta(z-z')e^{-x\gamma} \\ &\qquad + \frac{u}{2\pi} q_\gamma(x, |\mathbf{r} - \mathbf{r}'|; v_0) \\ &\qquad + \frac{c\sigma^2}{4\pi}\int_0^1 \frac{q_\gamma(x, |\mathbf{r} - \mathbf{r}'|; t)}{t^2 M(t)}\, dt, \end{aligned} \tag{7.5}$$

for $-\infty < x, y, y', z, z' < +\infty$, in which

$$\begin{aligned} &q_\gamma(x, \tilde{r}; t) \\ &= \exp(-x\gamma)\int_{-x}^{\infty} \frac{\exp[-\sigma t^{-1}(s^2 + \tilde{r}^2)^{\frac{1}{2}} - \gamma s]\, ds}{(s^2 + \tilde{r}^2)^{\frac{1}{2}}} \end{aligned} \tag{7.6}$$

and

$$\begin{aligned} w(x) &= 0, \quad x < 0, \\ &= 1, \quad x > 0. \end{aligned} \tag{7.7}$$

Since

$$F_1(x, B; \gamma) \xrightarrow[B\to\infty]{} \begin{cases} O(\exp(-\frac{1}{2}\tau B)B^{-2}), & 0 < x < \tau, \\ O(B^{-2}), & x = 0 \text{ or } \tau, \end{cases} \tag{7.8}$$

the last term of (7.4) is much easier to integrate numerically than is the last term of (5.10). However, we cannot use (7.4) for all γ and c. $\rho_{3\infty}(x, y-y', z-z'; \gamma)$ is the neutron density at (x, y, z) in an

infinite medium from an uncollided source

$$w(x)\delta(y-y')\delta(z-z')e^{-x\gamma},$$

$$\rho_{3\infty}(x, y-y', z-z'; \gamma) = \frac{c\sigma}{4\pi}\iiint_{-\infty}^{+\infty} \frac{\exp(-\sigma|\mathbf{r}-\hat{\mathbf{r}}|)}{|\mathbf{r}-\hat{\mathbf{r}}|^2} \times \rho_{3\infty}(\hat{x}, \hat{y}-y'; \hat{z}-z'; \gamma)\, d^3\hat{r} + w(x)\delta(y-y')\delta(z-z')e^{-x\gamma}, \quad (7.9)$$

and makes sense, physically, only for $0 \leq c < 1$ and $\operatorname{Re}\gamma > -\sigma/\nu_0$.

In radiation transport theory, $\rho_3(x, y, z; \sigma)$ is the solution to the "flashlight problem." Hunt solved a particular problem of this class where a beam of radiation normally incident on a slab atmosphere is modulated by the Bessel function $J_0(B\tilde{r})$. Then the radiation "source function" $J(\mathbf{r})$ satisfies (2.1) with $S(\mathbf{r}) = 2\pi J_0(B\tilde{r})e^{-x}$, where B is a free parameter. In terms of the theory of Sec. 4, his result is simply $J(\mathbf{r}) = 2\pi J_0(B\tilde{r})F(x, B; 1)$, where c is interpreted as the albedo for a single scattering.[5]

To physically interpret $F(x, B; \gamma)$, refer to (3.15), (3.12), and (4.2). $F(x, 0; \sigma)$ represents the neutron density in a slab from a uniform unit beam normally incident to the left face [satisfying (2.1) with $S(\mathbf{r}) = e^{-\sigma x}$], while $f_+(x, 0; \sigma)$ represents the neutron density in a slab from uniform unit beams normally incident to both faces.

B. Asymptotic Theory in the Transverse Directions

For $B \in (0, \infty)$, $F(x, B; \sigma)$ can be interpreted as the "asymptotic-theory" solution for neutron transport in a finite prism. (Asymptotic theory: Assume the form of the solution in the two transverse dimensions to be $e^{i\mathbf{B}\cdot\mathbf{r}}$ and solve the resulting modified transport equation exactly in the third dimension.) That is, consider the integral equation for the neutron density $\rho(x, y, z)$ in a finite prism (see Fig. 7) with a cosine-modulated beam normally incident to the left face:

$$\rho(x, y, z) = \frac{c\sigma}{4\pi}\int_0^\tau d\hat{x}\int_{-\frac{1}{2}a}^{\frac{1}{2}a} d\hat{y}\int_{-\frac{1}{2}b}^{\frac{1}{2}b} d\hat{z}\,\rho(\hat{x}, \hat{y}, \hat{z})\frac{\exp(-\sigma|\mathbf{r}-\hat{\mathbf{r}}|)}{|\mathbf{r}-\hat{\mathbf{r}}|^2} + e^{-\sigma x}\cos\left(\frac{\pi}{a}y\right)\cos\left(\frac{\pi}{b}z\right), \quad (7.10)$$

for $x \in [0, \tau]$, $y \in [-\frac{1}{2}a, \frac{1}{2}a]$, and $z \in [-\frac{1}{2}b, \frac{1}{2}b]$. Assuming a solution of the form

$$\rho(x, y, z) = \cos(\pi a^{-1}y)\cos(\pi b^{-1}z)n(x; a, b) \quad (7.11)$$

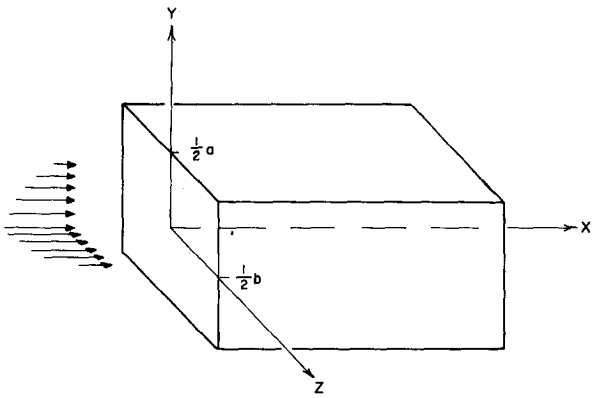

FIG. 7. A rectangular parallelopiped with a cosine-modulated beam incident to the left face.

and extending the limits of integration in (7.10) to $(-\infty, +\infty)$ in y and z, it is easy to show that $n(x; a, b)$ satisfies (3.15) with $\gamma = \sigma$ and with

$$B = [(\pi/a)^2 + (\pi/b)^2]^{\frac{1}{2}} = B_g,$$

the "geometric buckling." Thus,

$$\rho(x, y, z) \approx \rho_{\text{asymptotic}}(x, y, z) = \cos(\pi a^{-1}y)\cos(\pi b^{-1}z)F(x, B_g; \sigma), \quad (7.12)$$

and many of the results obtained by Kaper,[7] Williams,[6] and Smith[4] can easily be reproduced using the theory cited in Sec. 4.

For example, with $c > 1$ and fixing a and b, the critical length τ_0 of the prism in asymptotic theory is given by the smallest $\tau > 0$ for which the denominator of $F(x, B; \sigma)$ is zero. Using (5.2) and (5.3),

$$\tau_0 = \frac{\pi}{[(\sigma/|\nu_0|)^2 - B_g^2]^{\frac{1}{2}}} - 2\int_0^1 \frac{1-\theta(t)/\pi}{1+(t/|\nu_0|)^2}\frac{dt}{(\sigma^2+B_g^2t^2)^{\frac{1}{2}}} - \mathcal{U}(B_g, \tau_0), \quad (7.13)$$

where $\mathcal{U}(B_g, \tau_0) = O(\exp[-\tau_0/\alpha(B_g)])$. For a first estimate or for $\tau_0 \gg \alpha(B_g)$ (i.e., if a and b are small), the first two terms of (7.13) suffice and can be easily evaluated.[12] Furthermore, referring to (5.22)–(5.27), the critical neutron density is proportional to $\cos(\pi a^{-1}y)\cos(\pi b^{-1}z)\Phi_1(x)$ with B_1 replaced by B_g.

C. Plane-Source Densities

To physically interpret $\mathcal{G}(x, B; x')$, refer to Eq. (3.9). $\mathcal{G}(x, 0; x')$ is the neutron density at x in a slab from an uncollided plane source at $x' \in [0, \tau]$ and is, therefore, the Green's function for 1-dimensional neutron transport in a slab. Using (2.6), $[\mathcal{G}(x, 0; x') - \delta(x-x')]/c\sigma$ is the neutron density at x from a plane-isotropic

source at x'. Also, referring to Fig. 7,

$$\rho_{\text{asymptotic}}(x, y, z; x') = \cos(\pi a^{-1}y)\cos(\pi b^{-1}z) \times \mathfrak{G}(x, B_g; x')$$

is the asymptotic-theory solution for neutron transport in a finite prism $(\tau \cdot a \cdot b)$ with a cosine-modulated, plane-uncollided source at $x' \in [0, \tau]$.

$$\rho_{\text{asymptotic}}(x, y, z; x')$$

satisfies (2.1) with

$$S(r) = \cos(\pi a^{-1}y)\cos(\pi b^{-1}z)\delta(x - x').$$

To evaluate $\mathfrak{G}(x, B_g; x')$, it is convenient to use (6.2)–(6.5) with approximations (4.25) for $B_g \in \mathfrak{B}$. In (6.2), $\mathfrak{G}_\infty(x, 0; x')$ represents the infinite medium plane-source Green's function, while $\mathfrak{G}_0(x, 0; x')$ and $\mathfrak{G}_0(\tau - x, 0; \tau - x')$ are the boundary correction terms important near $x = 0$ and $x = \tau$, respectively. Note that (6.4) can be rewritten as in (6.8) and evaluated numerically, the integrand converging exponentially for x and/or x' not on the boundary.

8. 2-DIMENSIONAL NEUTRON TRANSPORT IN A SLAB

The results of 2-dimensional transport theory in a slab are immediately obtained by setting $B = \omega$ and by considering only 1-dimensional Fourier transforms. Section 4 is unchanged. The results of 2-dimensional asymptotic theory can be obtained from Sec. 7 by letting a or b go to infinity.

If $\rho_2(x, y; \gamma)$ satisfies (2.1) with $S(\mathbf{r}) = \delta(y)e^{-x\gamma}$, then $\rho_2(x, y - y'; \gamma)$ is the neutron density at (x, y) in a slab from a "sheet" of neutrons normally incident to the slab at $y = y'$. $\rho_2(x, y - y'; 0)$ is the neutron density at (x, y) in a slab from a plane-uncollided source normal to the slab at $y = y'$.

To evaluate $\rho_2(x, y - y'; \gamma)$ for $|y - y'| \gg 1/\sigma$ and $\tau \geq \tau_{\min}$, we use an equation analogous to (5.15) and (7.2):

$$\rho_2(x, y - y'; \gamma) = \delta(y)e^{-x\gamma} + \frac{1}{2\pi i}\int_\sigma^\infty \mathcal{F}(x, \beta; \gamma)e^{-\beta|y-y'|}\,d\beta + i\sum_{n=1}^{N} e^{-\beta_n|y-y'|}\mathcal{R}_n(x; \gamma) \tag{8.1a}$$

$$= \sum_{n=1}^{N} \frac{\pi}{\beta_n}\frac{\mathcal{N}_n(\gamma)}{\mathfrak{D}_n}\Phi_n(x)e^{-\beta_n|y-y'|} + O(e^{-\tau|y-y|}), \tag{8.1b}$$

for $|y - y'| \gg 1/\sigma$. To evaluate $\rho_2(x, y - y'; \gamma)$ for $|y - y'| \lesssim 1/\sigma$ or when $0 < \tau < \tau_{\min}$, we use equations analogous to (7.3)–(7.6) when $\operatorname{Re}\gamma > -\sigma/\nu_0$ and when $0 \leq c < 1$:

$$\rho_2(x, y; \gamma) = \rho_{2\infty}(x, y; \gamma) + \frac{1}{\pi}\int_0^\infty F_1(x, \omega; \gamma)\cos(\omega y)\,d\omega, \tag{8.2}$$

where

$$\rho_{2\infty}(x, y; \gamma) = \delta(y)e^{-x\gamma} + \frac{u}{\pi}j_\gamma(x, y; \nu_0) + \frac{c\sigma^2}{2\pi}\int_0^1 \frac{j_\gamma(x, y; t)}{t^2 M(t)}\,dt, \tag{8.3}$$

in which

$$j_\gamma(x, y; t) = e^{-x\gamma}\int_{-x}^\infty K_0\left(\frac{\sigma}{t}(s^2 + y^2)^{\frac{1}{2}}\right)e^{-\gamma s}\,ds. \tag{8.4}$$

In case $\operatorname{Re}\gamma \leq -\sigma/\nu_0$ or $c \geq 1$, the equation analogous to (5.10) is [see (3.4)]

$$\rho_2(x, y; \gamma) = \delta(y)e^{-x\gamma} + \tfrac{1}{2}c\sigma E_1(\sigma|y|)e^{-x\gamma} + \frac{1}{\pi}\int_0^\infty F_0(x, \omega; \gamma)\cos(\omega y)\,d\omega. \tag{8.5}$$

It is interesting to note that $[\rho_2(x, y; 0) - \delta(y)]/c\sigma$ is the neutron density at (x, y) from an isotropic plane source normal to the slab at $y = 0$ and in the slab $x \in [0, \tau]$. This is the solution to a problem considered recently by Williams,[12] and he obtains a result similar to (8.1) in the "wide slab" approximation [(4.25) and (5.35)–(5.38) in (8.1)].

If $G_2(x, y; x', y')$ satisfies (2.1) with

$$S(\mathbf{r}) = \delta(x - x')\delta(y - y'),$$

then it is the neutron density at (x, y) from an uncollided line source at $x = x'$, $y = y'$, and $z \in (-\infty, +\infty)$ in the slab. That is, $G_2(x, y; x', y')$ is the Green's function for 2-dimensional neutron transport in a slab.

To evaluate $G_2(x, y; x', y')$ for $|y - y'| \gg 1/\sigma$ and $\tau \geq \tau_{\min}$, the equation equivalent to (5.34) is

$$G_2(x, y; x', y') = \sum_{n=1}^{N} \frac{\pi}{\beta_n}\frac{\exp(-\beta_n|y - y'|)}{\mathfrak{D}_n}\Phi_n(x)\Phi_n(x') + O(\exp(-\sigma|y - y'|)) \tag{8.6}$$

for $|y - y'| \gg 1/\sigma$. To evaluate $G_2(x, y; x', y')$ for $|y - y'| \lesssim 1/\sigma$ or when $0 < \tau < \tau_{\min}$, the equations equivalent to (6.6)–(6.8) are

$$G_2(x, y; x', y') = G_{2\infty}(x, y; x', y') - G_{20}(x, y; x', y') - G_{20}(\tau - x, y; \tau - x', y'), \tag{8.7}$$

TABLE I. A summary of Green's functions obtained for multidimensional neutron transport in a slab.

Functional notation	Description	Equation satisfied	Convenient expressions $\lvert\tilde{\mathbf{r}} - \tilde{\mathbf{r}}'\rvert \gg 1/\sigma$ and $\tau \geq \tau_{\min}$ $\lvert y - y'\rvert \gg 1/\sigma$ and $\tau \geq \tau_{\min}$	$\lvert\tilde{r} - \tilde{r}'\rvert \not\ll 1/\sigma$ or $\tau < \tau_{\min}$ $\lvert y - y'\rvert \not\ll 1/\sigma$ or $\tau < \tau_{\min}$
$G(\mathbf{r}; \mathbf{r}')$	3D Green's function (uncollided) point-source density	(2.3)	(5.34) [with (5.35)–(5.38) for $\tau \gg \alpha(B_n)$]	(6.6)–(6.8) [with (4.25) for $B \in \mathcal{B}$][a]
$G_2(x, y; x', y')$	2D Green's function (uncollided) line-source density	(2.1) with $S(\mathbf{r}) = \delta(x - x')\delta(y - y')$	(8.6) [with (5.35)–(5.38) for $\tau \gg \alpha(B_n)$]	(8.7)–(8.9) [with (4.25) for $B \in \mathcal{B}$]
$\mathcal{G}(x, B; x')$	1D Green's function uncollided-plane-source density ($B = 0$) B is a free parameter	(3.9)	(6.2)–(6.5) [with (4.25) for $\tau \gg \alpha(B)$]	
$\rho_3(x, y - y', z - z'; \gamma)$	Normal beam Green's function γ is a free parameter: i.e., $\gamma = 0$: normal line source $\gamma = \sigma$: normal pencil beam $\gamma = \gamma_0$: "pseudo-two-group" normal beam	(2.1) with $S(\mathbf{r}) = \delta(y - y')\delta(z - z')e^{-z\gamma}$	(7.2) [with (4.25) and (5.35)–(5.38) for $\tau \gg \alpha(B_n)$]	(i) (7.3)–(7.7) for $\operatorname{Re}\gamma > -\sigma/\nu_0$ and $0 \leq c < 1$ (ii) (5.10) for $\operatorname{Re}\gamma \leq -\sigma/\nu_0$ or $c \geq 1$ [with (4.25) for $B \in \mathcal{B}$]
$\rho_2(x, y - y'; \gamma)$	2D normal beam Green's function γ is a free parameter; i.e., $\gamma = 0$: normal plane source $\gamma = \sigma$: normal sheet $\gamma = \gamma_0$: "pseudo-two-group" normal sheet	(2.1) with $S(\mathbf{r}) = \delta(y - y')e^{-z\gamma}$	(8.1) [with (4.25) and (5.35)–(5.38) for $\tau \gg \alpha(B_n)$]	(i) (8.2)–(8.4) for $\operatorname{Re}\gamma > -\sigma/\nu_0$ and $0 \leq c < 1$ (ii) (8.5) for $\operatorname{Re}\gamma \leq -\sigma/\nu_0$ or $c \geq 1$ [with (4.25) for $B \in \mathcal{B}$]

[a] $\mathcal{B} = \{B' \in (0, \infty): \tau \gg \alpha(B')\}$.

where

$$G_{2\infty}(x, y; x', y') = \delta(x - x')\delta(y - y') + \frac{u}{\pi} K_0\left(\frac{\sigma}{\nu_0}[(x - x')^2 + (y - y')^2]^{\frac{1}{2}}\right) + \frac{c\sigma^2}{2\pi}\int_0^1 \frac{K_0\left(\frac{\sigma}{t}[(x - x')^2 + (y - y')^2]^{\frac{1}{2}}\right)}{t^2 M(t)}\, dt \quad (8.8)$$

and

$$G_{20}(x, y; x', y') = \frac{1}{\pi}\int_0^\infty \mathcal{G}_0(x, \omega; x') \cos[\omega(y - y')]\, d\omega. \quad (8.9)$$

$G_{2\infty}$ is the infinite medium 2-dimensional Green's function, while the G_{20} are boundary correction terms.

In using the equations of this section, the same remarks made in Secs. 5–7 [concerning the rate of convergence of integrals and the use of approximations (4.25)] apply here.

9. CONCLUSIONS

In Secs. 2–8, we have obtained Green's functions for several classes of multidimensional neutron transport problems in a slab, under the assumptions of steady-state, one-speed, and isotropic scattering.

In the general case, the point-source Green's function $G(\mathbf{r}; \mathbf{r}')$ can be used to obtain the solution to the transport equation (2.1) for any uncollided neutron density $S(\mathbf{r})$. For example, the neutron density $\rho(\mathbf{r}; \mathbf{\Omega}_0)$, from a monodirectional pencil beam incident to the slab at any angle, can be obtained by integrating $G(\mathbf{r}; \mathbf{r}')$ along the beam path [see Eqs. (2.2), (2.5), and Fig. 2]:

$$\rho(\mathbf{r}; \mathbf{\Omega}_0) = \int_0 G(x, y, z; x', x' \tan\theta_0 \cos\varphi_0, x' \tan\theta_0 \sin\varphi_0) \exp\left(\frac{-\sigma x'}{\cos\theta_0}\right) dx'. \quad (9.1)$$

And the neutron density from any beam can be obtained by integrating $\rho(\mathbf{r}; \mathbf{\Omega}_0)$ over the angular and spatial distribution of the beam. Note that the "pseudo-two-group" problem can be done for nonnormal beams by using (9.1) in (7.1).

For problems with a higher degree of symmetry, e.g., normally incident neutron beam, it is simpler to use another more appropriate Green's function having the same symmetry. Table I gives a summary of the most convenient equations for evaluating these functions under various circumstances.