LECTURE 18

The 40 Meter prototype Interferometer as an Example of Many of the Issues Studied in this Course

Lecture by Robert Spero

Assigned Reading:

XX. R. Weiss, *Quart. Prog. Rep. Res. Lab. Electron. M.I.T.* **105**, 54 (1972). [The seminal paper presenting in detail how laser interferometers can be used for gravitational wave detection, including a comprehensive analysis of noise sources.]

YY. Robert L. Forward, "Wideband laser-interferometer gravitational-radiation experiment," *Phys. Rev. D* **17**(2), 379–390 (1977). [A description of the first interferometric gravitational-wave detector to be built (a 2 m Michelson interferometer) and the first search for gravitational waves using such a detector (a coincidence run conducted in 1972 between the interferometer and several bar detectors).]

A Few Suggested Problems: *Note: Your homework for Lectures 17 and 18 is to be turned in to Shirley Hampton in room 151 Bridge Annex before 1:00PM Friday June 3*

1. In this course you have encountered all the significant noise sources for interferometric detectors that the LIGO team is now aware of. Which of these were unanticipated by Weiss in Ref. 1 above; and are they "fundamental" or are they "technical"?
2. The interferometer described in Weiss's paper has a different optical configuration from the 40 m interferometer, but the shot noise calculated by Weiss is similar to that achieved in the 40 m. Why? Compare the shot noise limited sensitivity calculated by Weiss with the sensitivity achieved by Forward, and account for the difference.
3. The thermal noise calculated by Weiss is based on viscous damping [$\phi(\omega) \propto \omega$]. How does the thermal noise prediction change when if the damping is structural [$\phi(\omega)$ independent of ω]? cf. Lectures 13 and 14.
4. Weiss calculated noise from laser intensity fluctuations acting on the test masses via radiation pressure. Intensity fluctuations also result in noise (in a manner discussed in Spero's lecture) if the interferometer's operating point is offset from a "dark fringe" at the photodiode. Under what circumstances will this noise be larger than that due to radiation-pressure fluctuations.

Lecture 18
The 40 Meter Prototype Interferometer as an Example of Many of the Issues Studied in this Course

by Robert Spero, 27 May 1994

Spero lectured from the following transparencies. Kip has annotated them a bit.

LECTURE 18

THE 40 m INTERFEROMETER AS EXAMPLE OF ISSUES STUDIED IN COURSE

R. SPERO

27 MAY 1994

TIME DOMAIN DATA, PULSE HEIGHT DISTRIBUTION, AND PULSE CALIBRATION

[LECTURE 3]

VIEW INTERFEROMETER OUTPUT IN TIME DOMAIN,

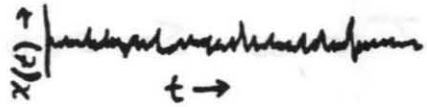

AND ANALYZE AS A TRAIN OF PULSES OF VARYING HEIGHT $x(t)$

GAUSSIAN DISTRIBUTION: $N(x) \propto e^{-\frac{1}{2}\left(\frac{x}{\sigma}\right)^2}$

where $N(x)$ = "density" of pulses with amplitude x

σ = average (rms) pulse height

THEN

signal-to-noise ratio (SNR) of a pulse $= \frac{x}{\sigma}$

Histogram the time series

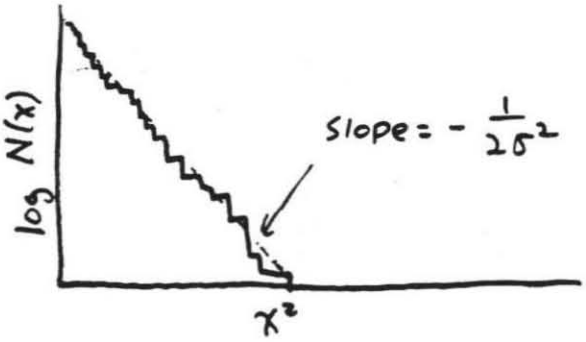

Calibration requires converting from voltage to ΔL or h: inject large ($x > 10\,\sigma$) displacement pulse, of known amplitude

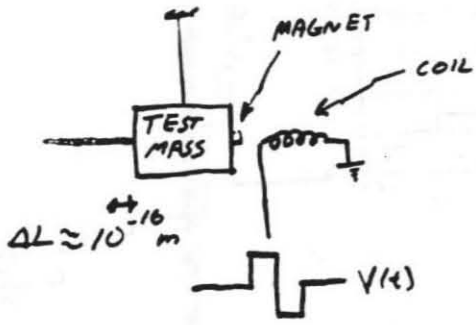

Q: HOW CAN ONE CALIBRATE THE CALIBRATOR; i.e. CONVERT FROM $V(t)$ TO $\Delta L(t)$

Calibration pulse is separate from noise:

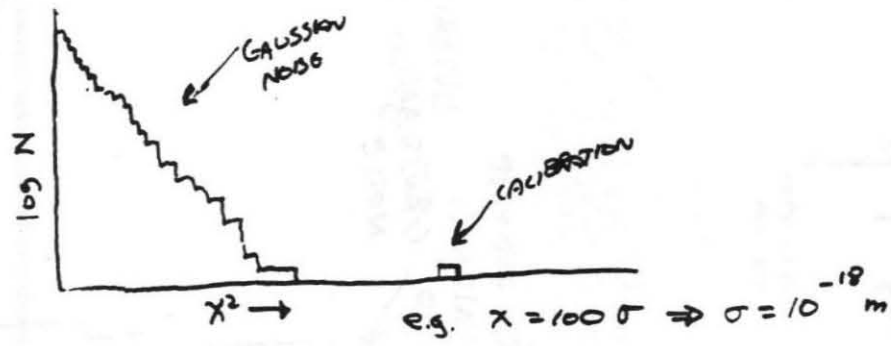

σ = PULSE SENSITIVITY OF INTERFEROMETER

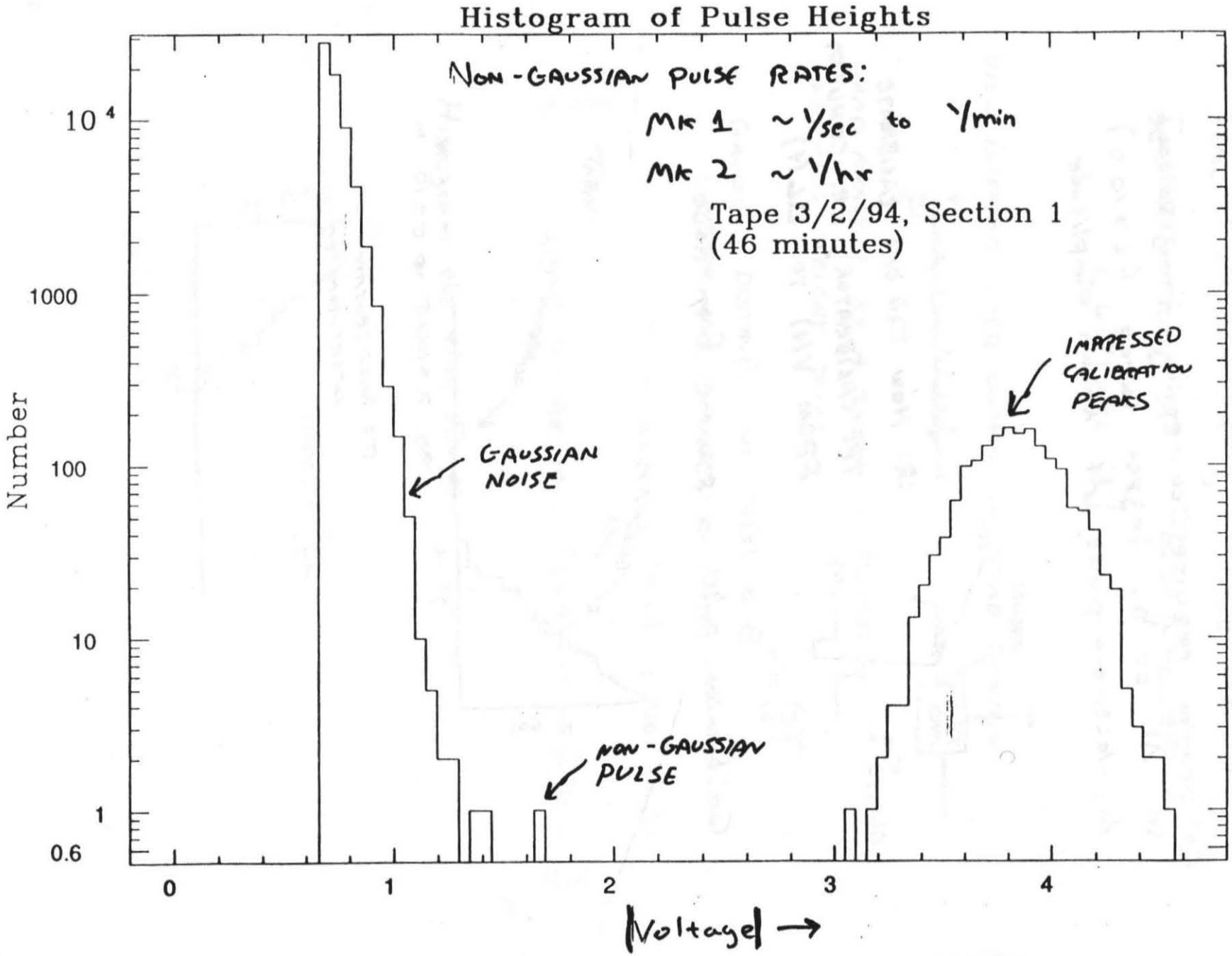
Histogram of Pulse Heights
NON-GAUSSIAN PULSE RATES:
MK 1 ~ 1/sec to 1/min
MK 2 ~ 1/hr
Tape 3/2/94, Section 1
(46 minutes)
IMPRESSED CALIBRATION PEAKS
GAUSSIAN NOISE
NON-GAUSSIAN PULSE
Number
10 4
1000
100
10
1
0.6
0
1
2
3
4
|Voltage| →

MATCHED FILTER TO INCREASE SNR

(A SIMULATION)

FILTER INPUT

FILTER OUTPUT

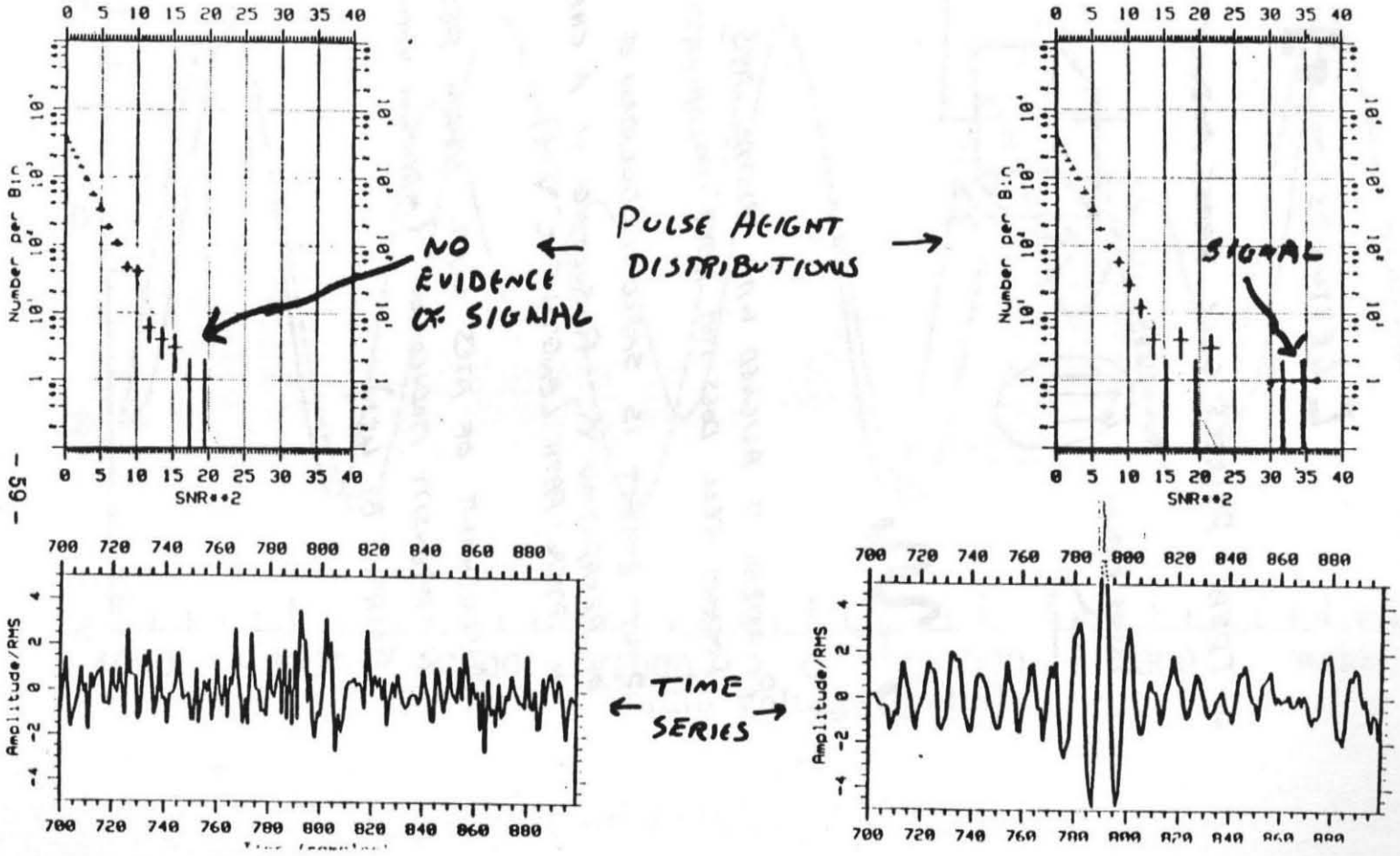

IMPERFECTIONS IN PHASE MODULATION USING POCKELS CELLS

[LECTURES 7, 8]

1. IDEAL POCKELS CELL PHASE MODULATOR

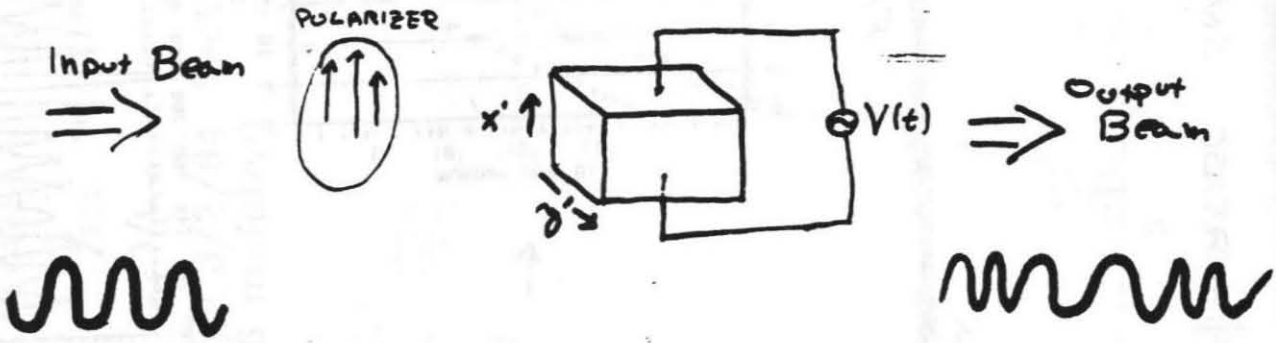

POLARIZER IS ALIGNED WITH CRYSTAL AXIS, SO POCKELS CELL DOES NOT ALTER POLARIZATION

ONLY EFFECT IS SMALL MODULATION OF INDEX OF REFRACTION n, RESULTING IN A CHANGE IN OPTICAL PATH LENGTH $\propto V(t)$

MISALIGNMENT OF AXES W.R.T. BEAM RESULTS IN INTENSITY MODULATION (MAXIMUM WHEN x', y' ROTATED BY 45°)

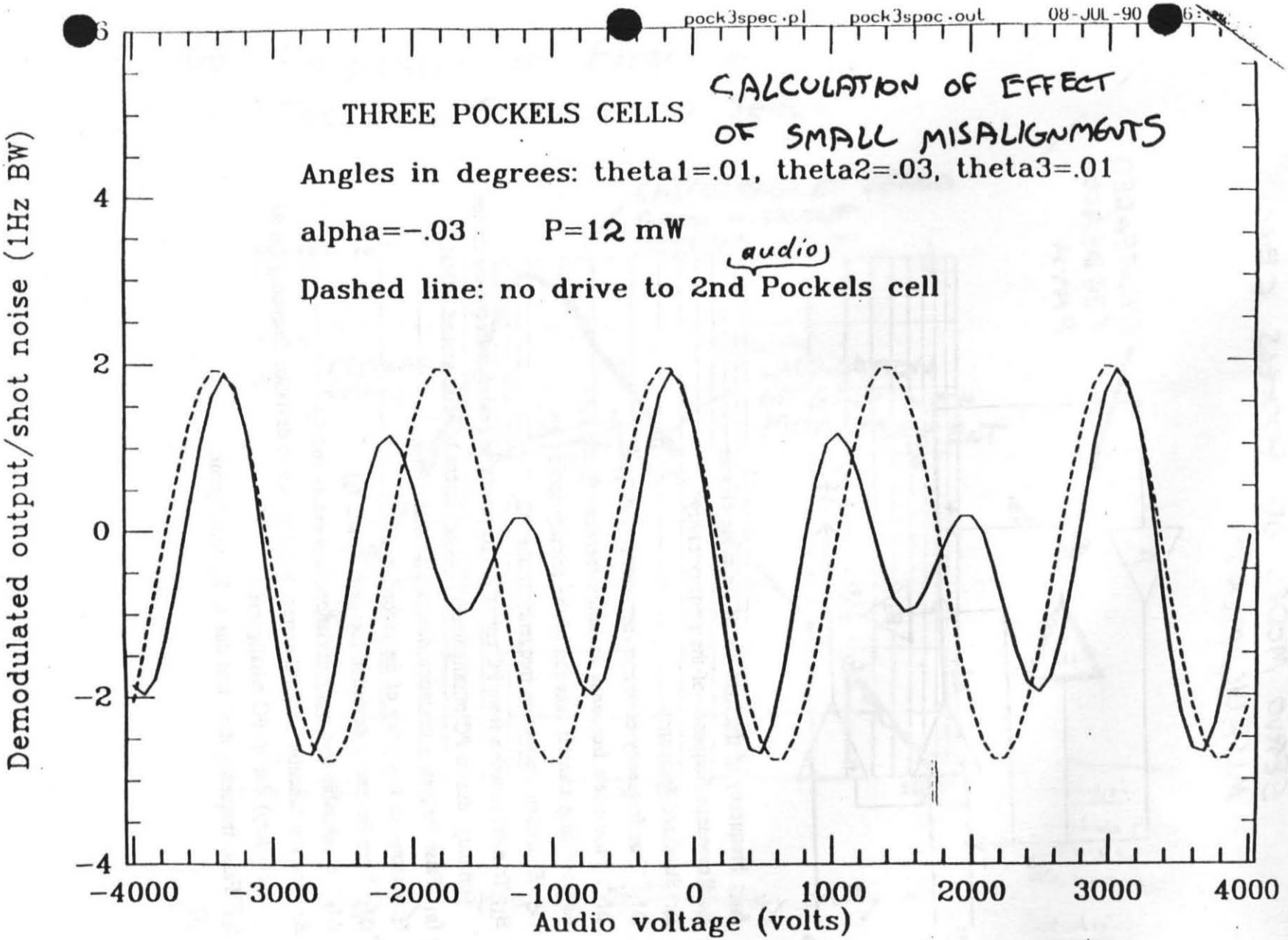
pock3spec.pl pock3spec.out 08-JUL-90
THREE POCKELS CELLS
CALCULATION OF EFFECT OF SMALL MISALIGNMENTS
Angles in degrees: theta1=.01, theta2=.03, theta3=.01
alpha=-.03 P=12 mW
audio
Dashed line: no drive to 2nd Pockels cell
Demodulated output/shot noise (1Hz BW)
Audio voltage (volts)
4
2
0
-2
-4
-4000
-3000
-2000
-1000
0
1000
2000
3000
4000

SERVO MODEL OF POCKELS CELL MISALIGNMENT

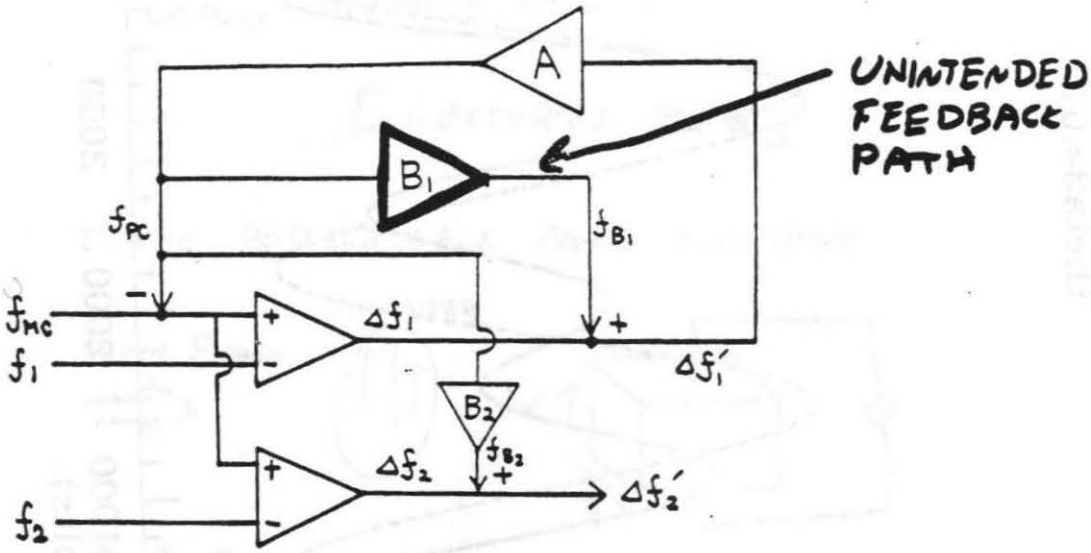

f_{MC}: Frequency of the light out of the mode cleaner

f_1: Resonance frequency of the primary cavity

f_0: Stabilized frequency

Δf_1: True frequency deviation (between f_0 and f_1)

$\Delta f_1'$: Measurable frequency deviation (between f_0 and f_1)

A: Open loop transfer function of the primary servo

f_{PC}: Equivalent correction frequency to the PC

B_1: Transfer function from PC correction frequency to deviation frequency (in the primary) due to PC misalignment (through intensity noise around 12MHz)

f_{B1}: False frequency deviation due to PC misalignment

f_2: Resonance frequency of the secondary cavity

Δf_2: True frequency deviation (between f_0 and f_2)

$\Delta f_2'$: Measurable frequency deviation (between f_0 and f_2)

B_2: Transfer function from PC correction frequency to deviation frequency (in the secondary) due to PC misalignment

f_{B2}: False frequency deviation due to PC misalignment

7

... AND CALCULATION OF EFFECT ON FREQUENCY STABILIZATION SERVO

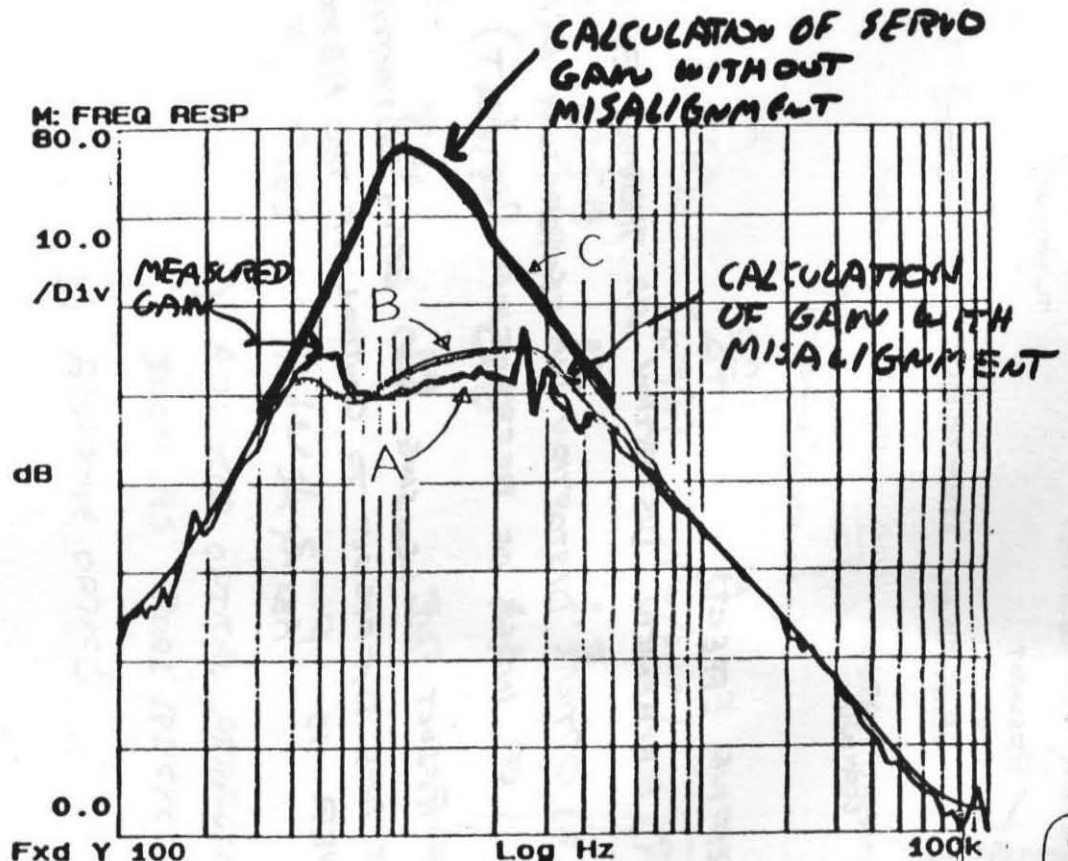

Fig. 1 Frequency suppression of the primary cavity servo.

A: Measured
B: Calculated (with spurious paths)
C: Calculated (without spurious paths)

Conclusion:

Pockels cells used in this configuration are unacceptable.

Solution:

Move Pockels cells out of the most sensitive locations

MIRROR HEATING AS LIMIT TO OPTICAL POWER

[LECTURE 9]

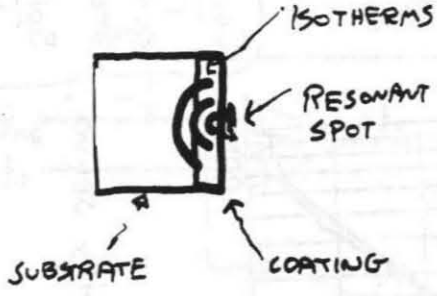

TWO HEATING EFFECTS

1) MECHANICAL DISTORTION VIA THERMAL EXPANSION (α)

2) OPTICAL DISTORTION VIA TEMPERATURE DEPENDENCE OF INDEX OF REFRACTION ($\Delta n / \Delta T$)

BOTH RESULT IN LENSING AND BEAM DISTORTIONS THAT ARE DIFFICULT TO CONTROL IF THE ABSORBED POWER IS $P_{ABS} \gtrsim 1\ W$.

HEATING EFFECTS MINIMIZED BY

1) REDUCING ABSORPTION IN COATING

$$\frac{P_{ABSORBED}}{P_{INCIDENT}} < 10^{-5}$$ COATINGS ARE AVAILABLE

2) SELECTING SUBSTRATE MATERIAL

SMALL α, SMALL $\frac{\Delta n}{\Delta T}$, LARGE THERMAL CONDUCTIVITY λ

(thermal expansion)

MATERIAL	α $(10^{-6}/K)$	$\frac{\Delta n}{\Delta T}$ $(10^{-6}/K)$	λ $(W/m\text{-}K)$
FUSED SILICA	0.59	12	1.3
BK7	7.1	0.6	1.1
SAPPHIRE	8.4	13	35

It appears that coating heating will always dominate over substrate heating.

3) PIES IN THE SKY

a) ADVANCED OPTICAL ARRANGEMENTS, SUCH AS DUAL RECYCLING

b) ADAPTIVE OPTICS

ANTI-NOISE FILTERS AND SERVO BANDWIDTH

[LECTURE 10]

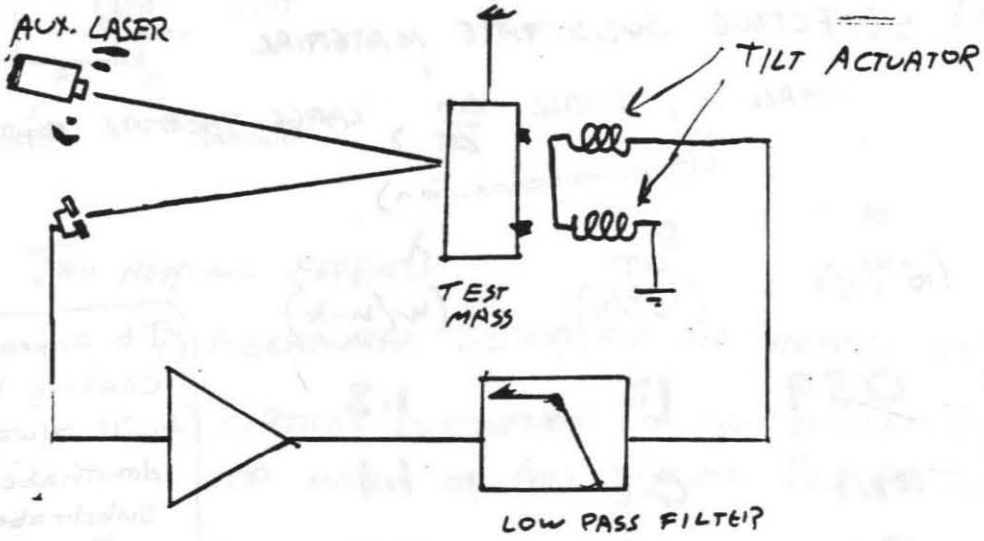

UNCONTROLLED TEST MASS IS QUIET IN TILTS IN SIGNAL BAND $f \gtrsim 100$ Hz, BUT HAS LARGE MOTION NEAR $f = 1$ Hz.

OPTICAL LEVER SENSING SYSTEM IS ADEQUATELY STABLE NEAR 1 Hz, BUT NOISY FOR $f \gtrsim 100$ Hz (VIBRATION OF LASER, CONVECTION CURRENTS DEFLECTING BEAM, ...

(Q: HOW CAN ONE MAKE A QUIET OPTICAL LEVER?)

LOW PASS FILTER IS INTENDED TO PASS THE LOW FREQUENCY CONTROL SIGNALS, AND BLOCK THE SENSING NOISE BEFORE IT CAN DISTURB THE TEST MASS.

PRACTICAL LIMITATIONS TO LOW PASS FILTER

1) PHASE SHIFT AFFECTS SERVO PERFORMANCE
2) FILTER OUTPUT NOISE

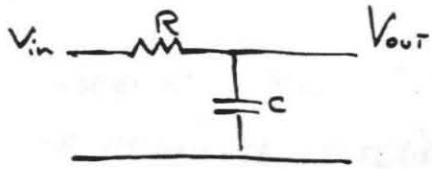

"SINGLE POLE"

$$\frac{V_{OUT}}{V_{IN}} = \frac{Z_c}{R+Z_c} = \frac{1}{1+j\frac{\omega}{\omega_0}} \qquad \omega_0 = \frac{1}{RC}$$

"n poles" (heuristic only) because the successive stages are not sufficiently independent

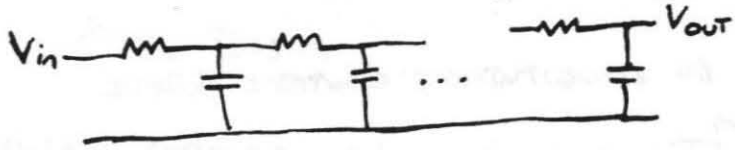

$$\frac{V_{OUT}}{V_{in}} = \frac{1}{\left(1+j\frac{\omega}{\omega_0}\right)^n}$$

$$\omega \gg \omega_0 \Rightarrow \left|\frac{V_{OUT}}{V_{in}}\right| \approx \left(\frac{\omega}{\omega_0}\right)^{-n}$$ ("STOPBAND" ATTENUATION)

PHASE SHIFT IN "PASSBAND" – $\omega \lesssim \omega_0$:

$$\omega \ll \omega_0 \Rightarrow \frac{V_{OUT}}{V_{in}} \approx 1 - nj\frac{\omega}{\omega_0}; \quad \text{Phase} \approx -n\frac{\omega}{\omega_0}$$

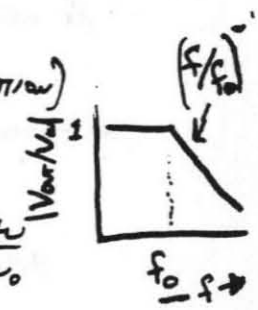

EXAMPLE: $n=12$, $f_0 = 10$ Hz attenuates noise at 100 Hz by $\sim 10^{12}$,
BUT causes $\sim 70°$ phase shift at $f = 1$ Hz,
and may make servo with gain at 1 Hz unstable

(In this case, lowering the bandwidth is an adequate solution; role off the gain at $f \lesssim 1$ Hz and thereby get a lower phase shift at unity gain)

JOHNSON NOISE OF RESISTOR

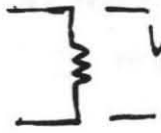

$$V_{noise}^2 = 4kTBR$$

$$\tilde{V}(f) = \sqrt{4kTR}$$

$$\tilde{V}_{50\,\Omega} = 9 \cdot 10^{-10}\ V/\sqrt{Hz}$$

PRACTICAL CONSEQUENCE: NOISE AT FILTER OUTPUT CAN BE SIGNIFICANT, ESPECIALLY AT FREQUENCIES WHERE LOOP GAIN IS SMALL

JOHNSON NOISE IN LONGITUDINAL CONTROL SERVO

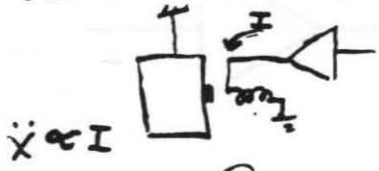

$\ddot{x} \propto I$

[Examples of the kinds of things one must worry about.]

$$R_{coil} \simeq 2\,\Omega$$

$$\tilde{V}(f) \simeq 2 \cdot 10^{-10}\ V/\sqrt{Hz}$$

$$x = \frac{\beta V}{f^2} \qquad \beta = 5 \cdot 10^{-5}\ \frac{m}{sec^2} \cdot \frac{1}{Volt}$$

$$\Rightarrow \tilde{x}(f) = 10^{-18}\ \frac{m}{\sqrt{Hz}} \quad \text{at } 100\ Hz$$

STARTING UP THE CONTROL SYSTEM: LOCK ACQUISITION

[LECTURE 11]

PROBLEM: MOST (> 99.9%) CAVITY IS OUT OF RESONANCE, AND THERE IS NO SIGNAL ~~FOR THE~~ CONTROL SYSTEM TO USE.

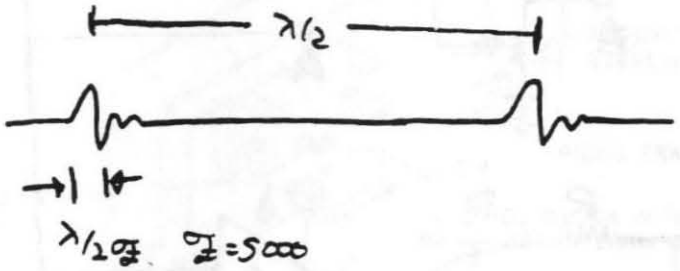

DESIGN STRATEGY:

1.) Slow down fringes by seismic isolation, active damping

2) Construct servo to have high gain and stable operation when in resonance

3) Attend to electronic saturation properties

4) Maximize dynamic range

$$\Delta X_{\text{BEFORE LOCK}} \approx 10^{-6}\ \text{m}$$

$$\Delta X_{\text{IN LOCK}} \approx 10^{-12}\ \text{m}$$

Saturation is inevitable when trying to lock the interferometer; one must be careful of how the electronics behaves when saturated.

REQUIREMENTS FOR LOCK ACQUISITION COMPETE WITH REQUIREMENT OF LOW NOISE AFTER RESONANCE IS ESTABLISHED. TRICK: SWITCH FROM "ACQUIRE" MODE TO "RUN" MODE. SWITCH MUST BE GENTLE; OTHERWISE LOCK IS DISRUPTED

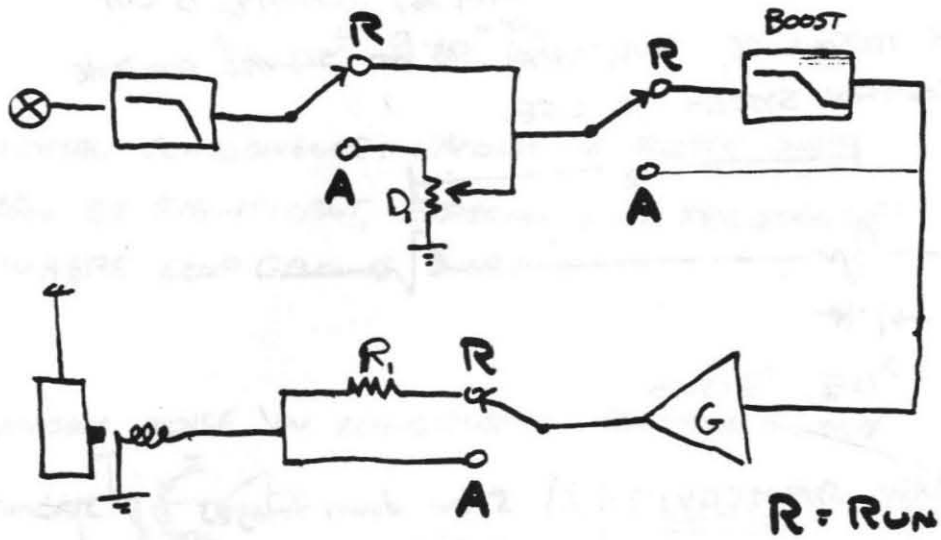

R = RUN MODE
A = ACQUIRE MODE

<u>ACQUIRE MODE</u>: INPUT TO AMPLIFIER G IS ATTENUATED BY D_1, TO REDUCE OVERLOADING

<u>RUN MODE</u>: ATTENUATE OUTPUT OF G FOR LESS NOISE (AND LESS DYNAMIC RANGE).
ATTENUATION SAME AS D_1
ALSO: LOW FREQUENCY BOOST INSERTED.
INCREASES GAIN BELOW 100 Hz, DOES NOT AFFECT SERVO STABILITY

DEPARTURE FROM IDEAL ($\frac{1}{f^2}$)

SUSPENSION: RESONANT NORMAL MODES

OF COUPLED MECHANICAL OSCILLATORS

[LECTURE 12]

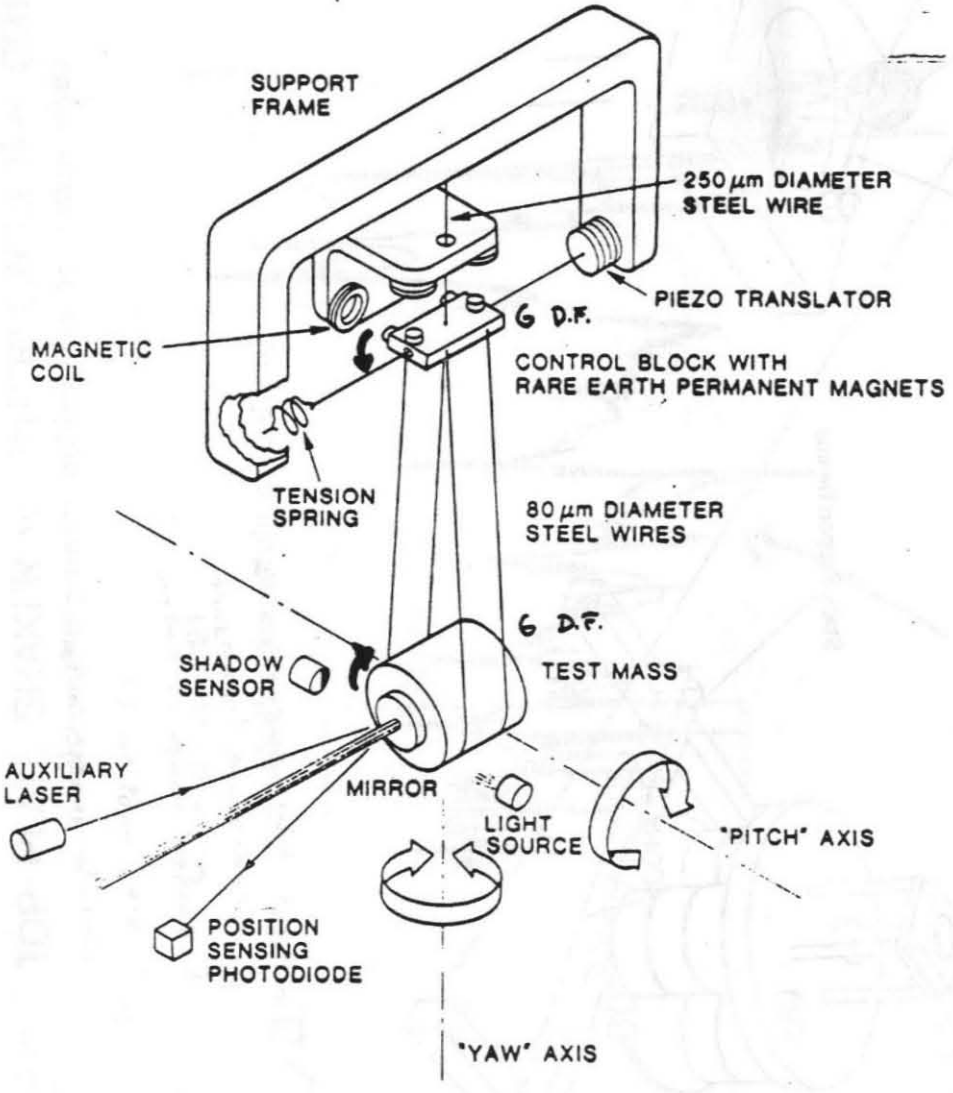

SUSPENSION ISOLATION MEASUREMENT

STACK EXCITATION

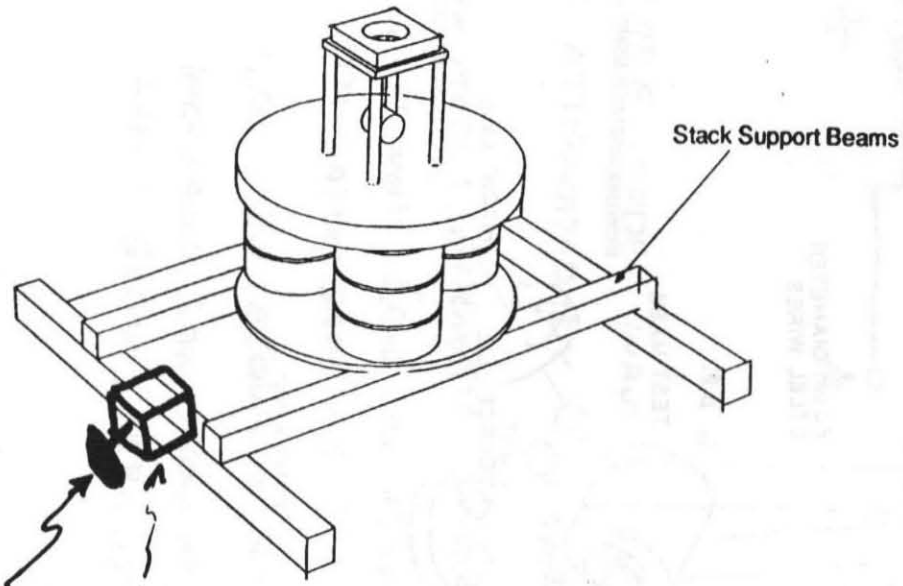

To test the suspension's performance (measure transfer function from ground motion to interferometer output)

SUSPENSION EXCITATION

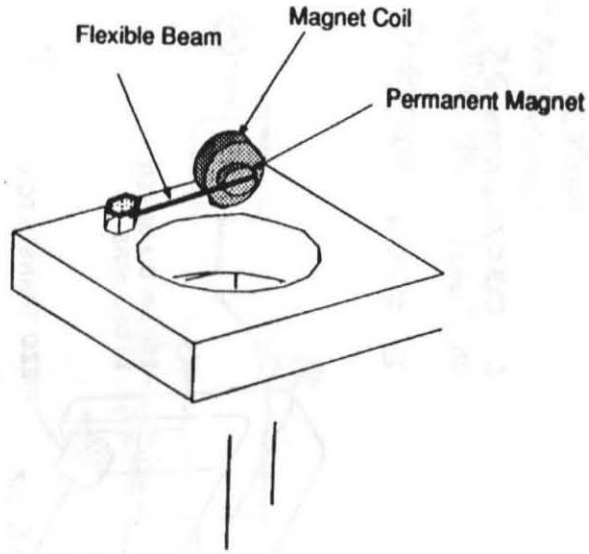

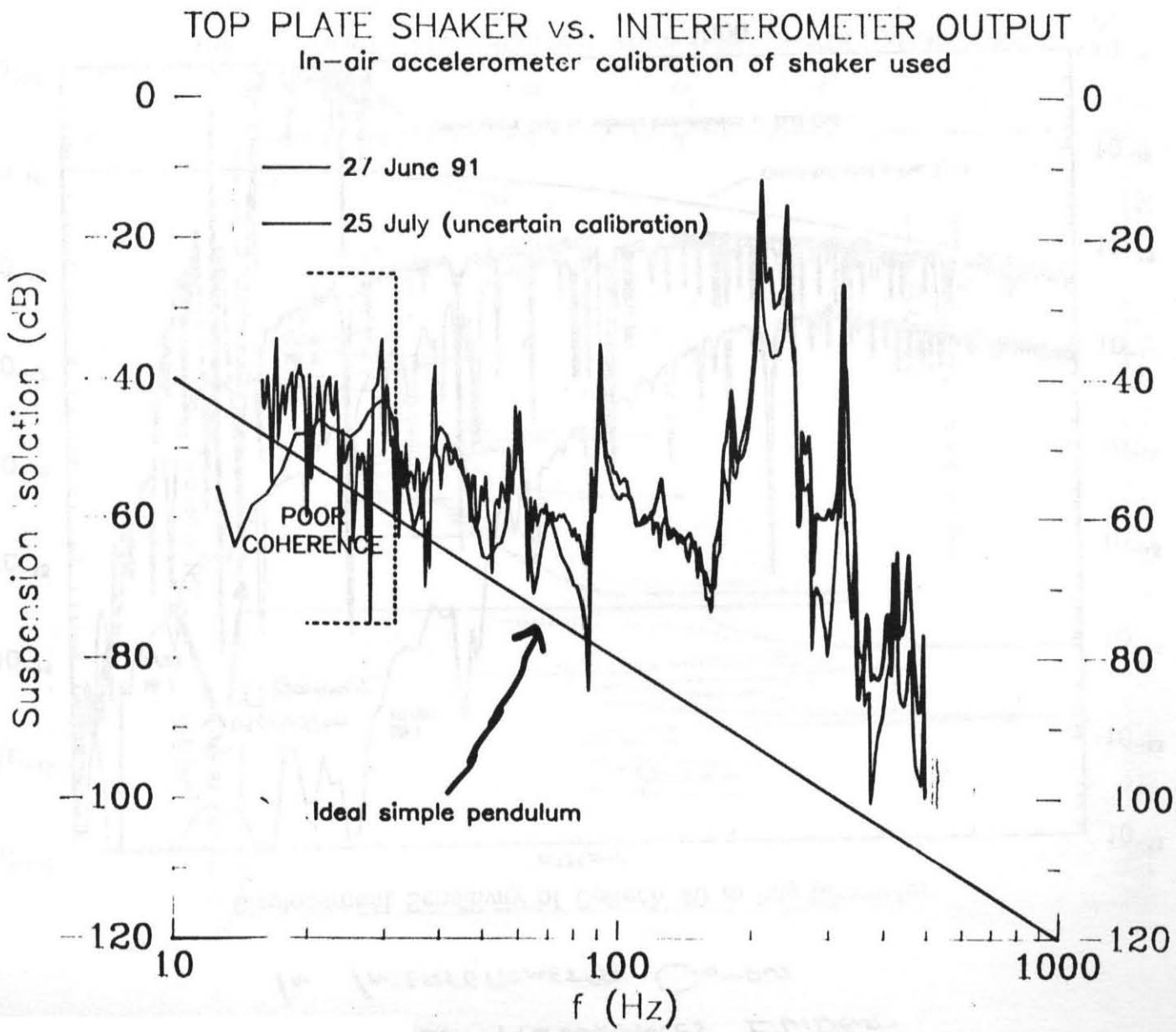
TOP PLATE SHAKER vs. INTERFEROMETER OUTPUT
In-air accelerometer calibration of shaker used
27 June 91
25 July (uncertain calibration)
POOR COHERENCE
Ideal simple pendulum
Suspension isolation (dB)
f (Hz)
0
-20
-40
-60
-80
-100
-120
10
100
1000

Suspension Resonances Evident In Interferometer Output

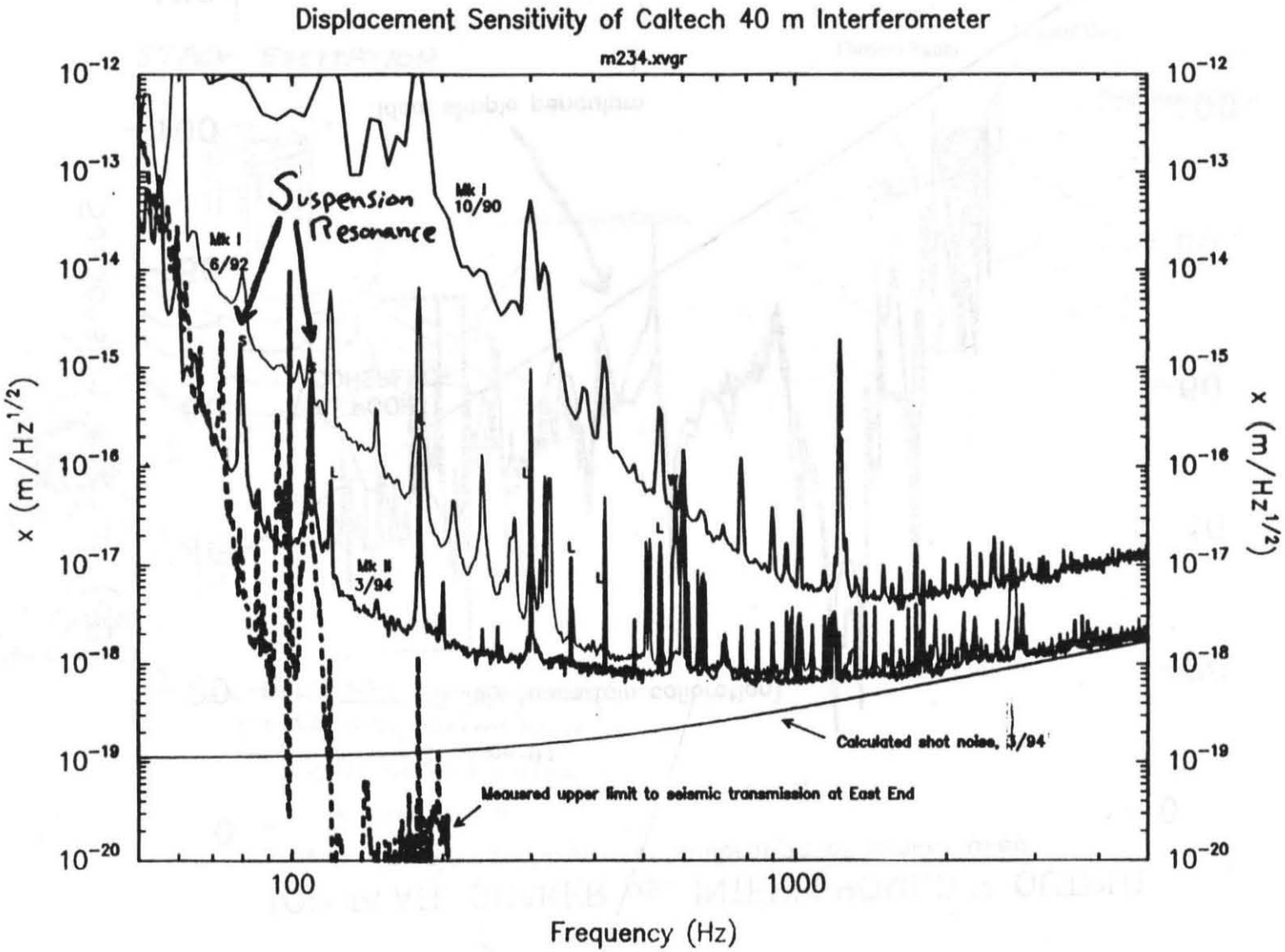

(SOME) REDUCTION OF SUSPENSION RESONANCES
BY (SLIGHT) SIMPLIFICATION OF SUSPENSION

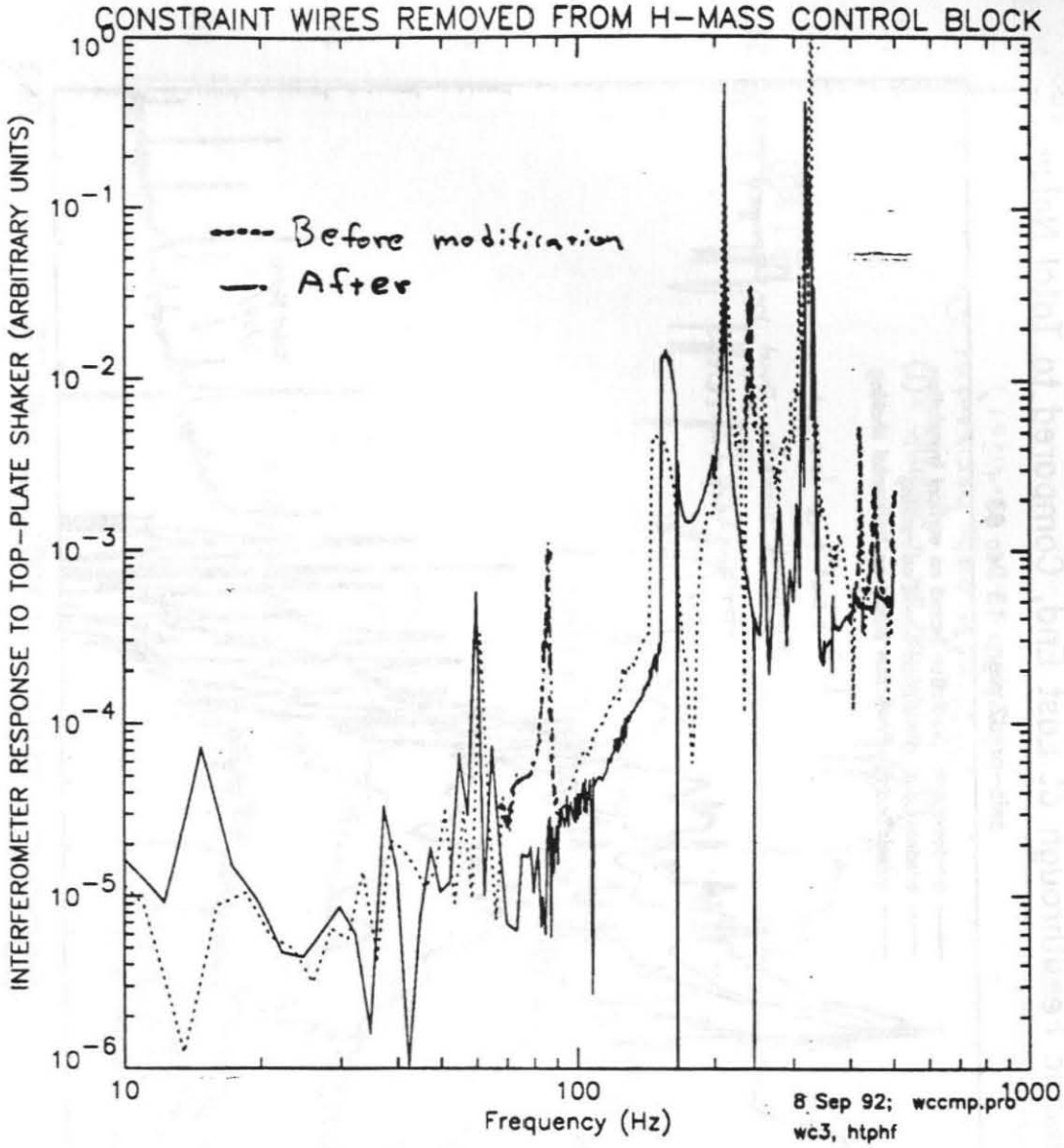

SEISMIC ISOLATION STACK IMPERFECTION:

INTERFEROMETER IS MORE RESPONSIVE TO VERTICAL EXCITATION!

Seismic Feedthrough at East End, Compared to Total Noise

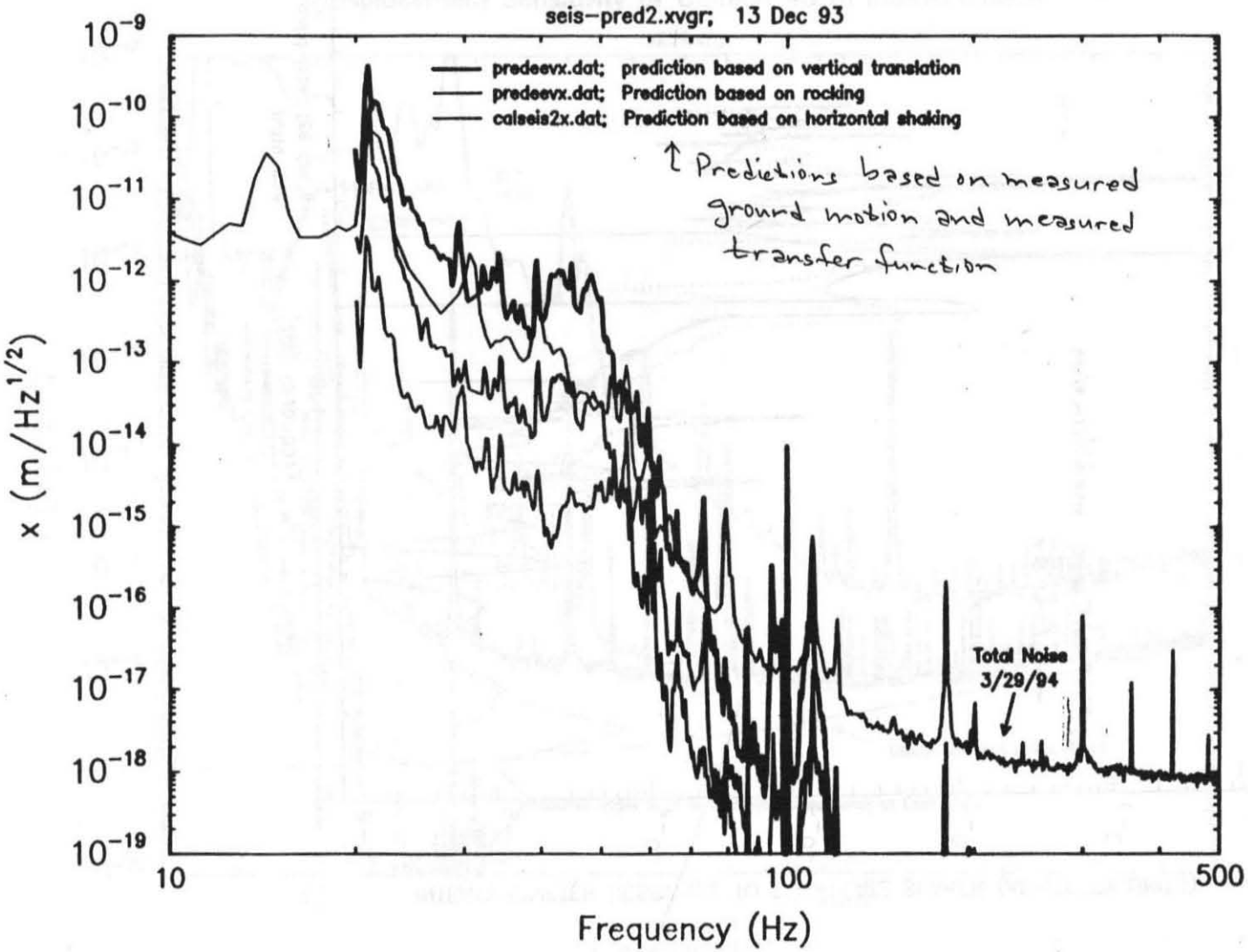

Design Exercise: SEISMIC ISOLATION DESIGN FOR MARK II: OLD SUSPENSION, NEW STACK

ISOLATION STACK PERFORMANCE

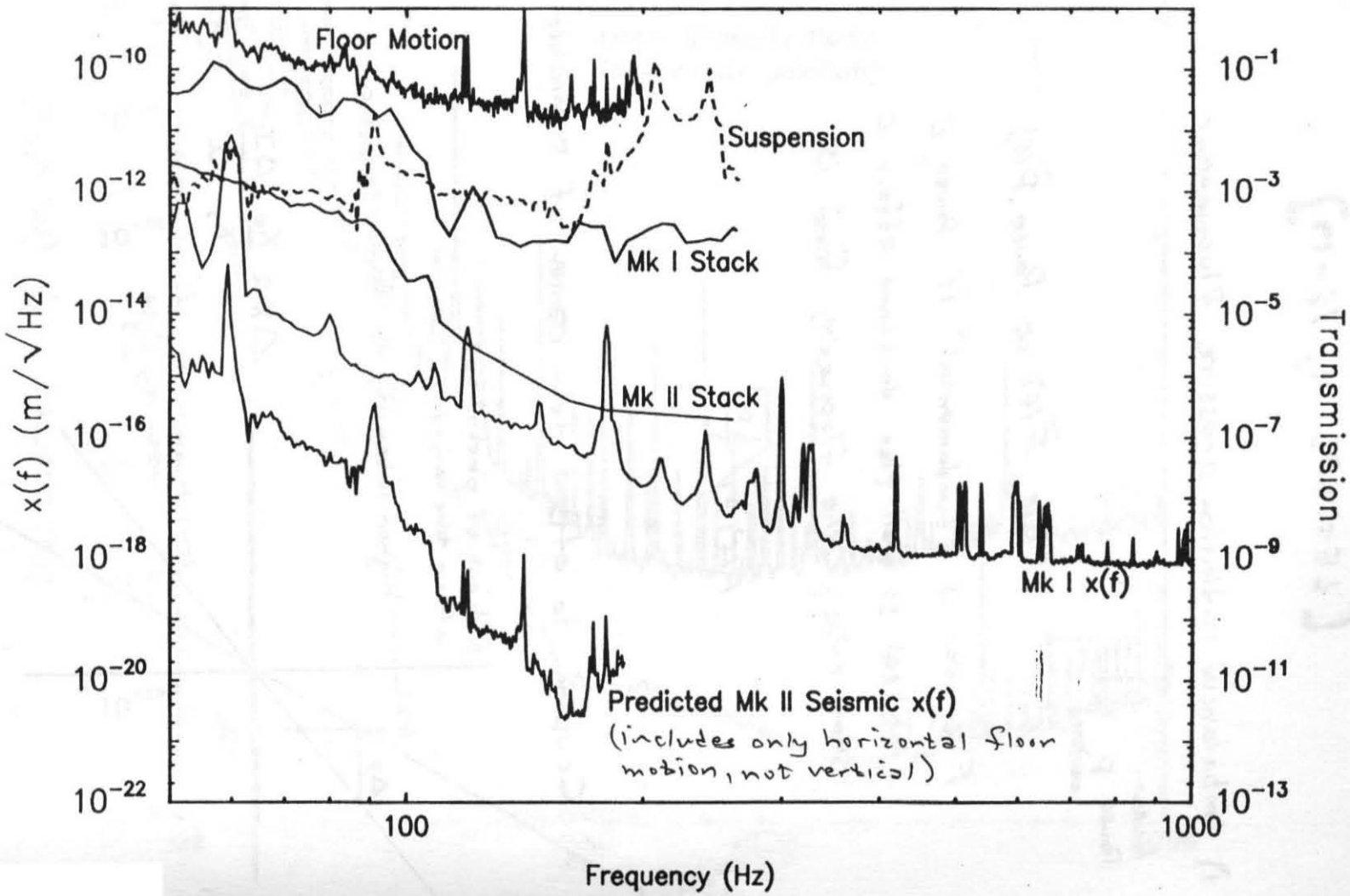

NEXT: NEW SUSPENSIONS, SOFTER STACKS

Wed May 28 10:14:58 1993

TWO TYPES OF INTENSITY NOISE

[LECTURE 7, 16-17]

1) Imbalanced radiation pressure fluctuations

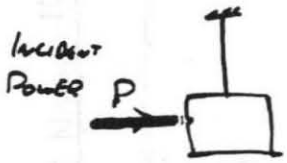

Force $\tilde{F}(f) \propto$ Power $\tilde{P}(f)$

Fluctuation is "fundamental" if Power is stabilized so well that dominant effect is shot noise; the fluctuating force is

$$\tilde{F}(f) = \sqrt{\frac{hP}{\lambda_c}}$$

2) Coupling to offset from center of resonance

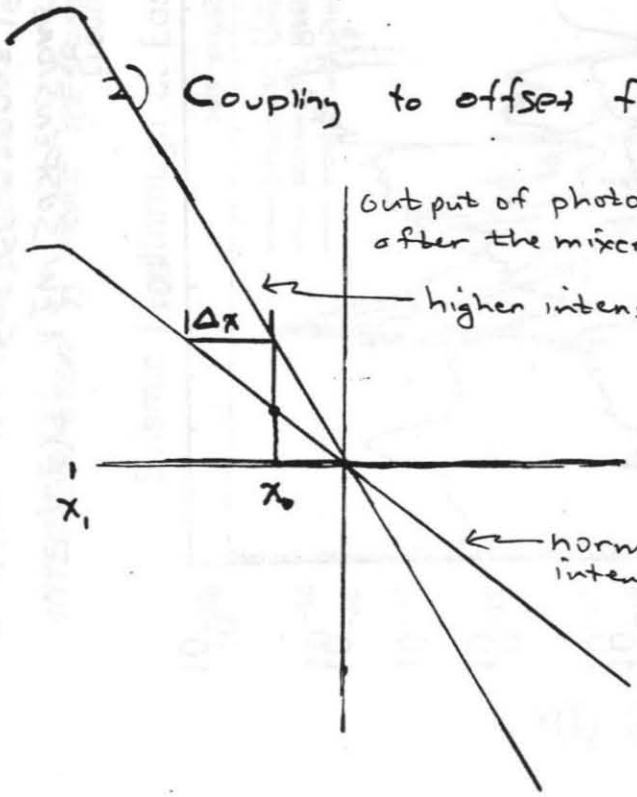

$$\Delta x \approx \frac{x_0}{x_1}\frac{\Delta I}{I}$$ ← Operating point: offset from dark fringe

MEASURED EFFECT OF INTENSITY NOISE IS SMALL

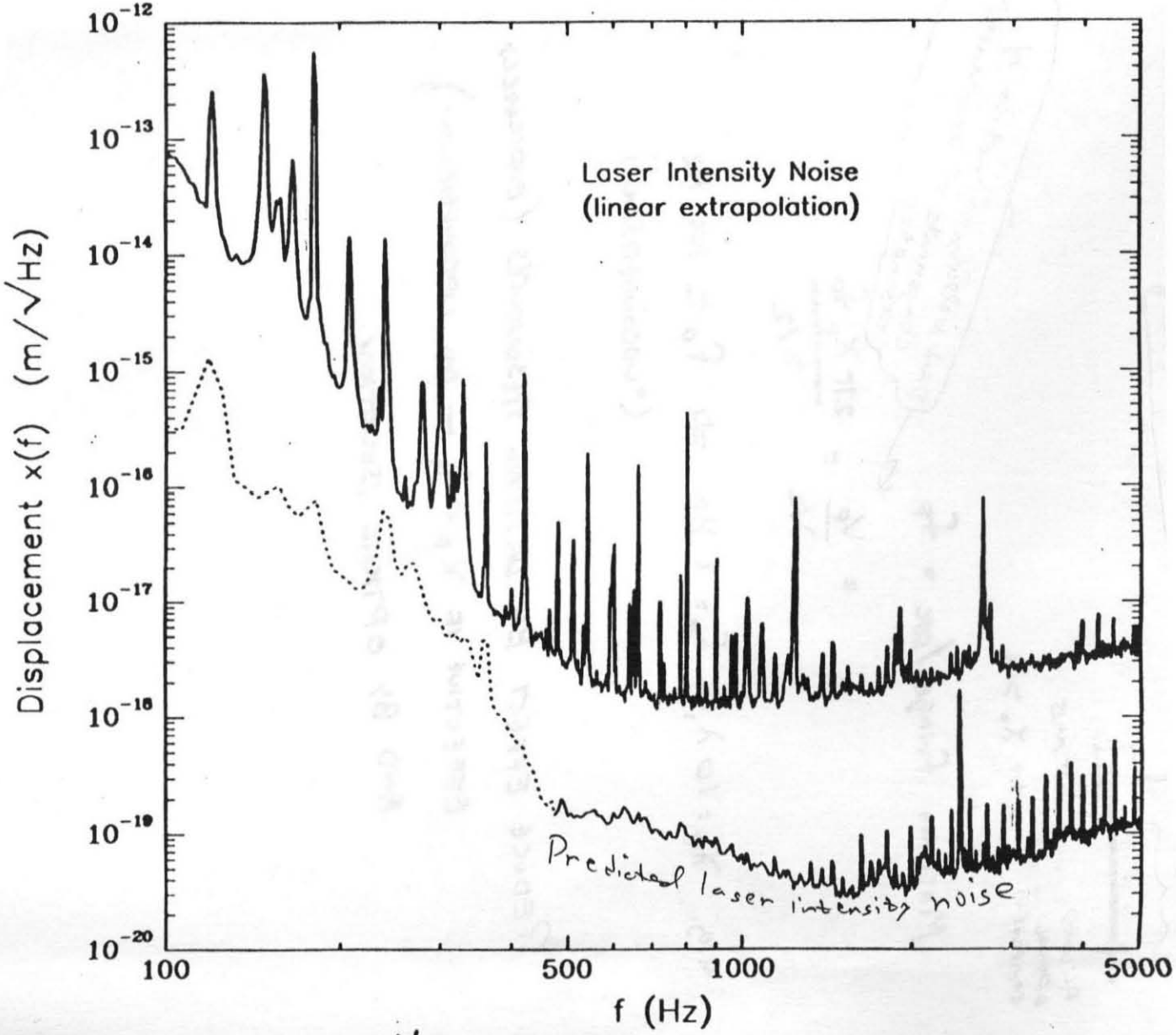

NOTE: THIS IS AN OLD NOISE SPECTRUM

UPCONVERSION BY SCATTERING

[LECTURE 15]

Mechanical vibrations at low frequency & large amplitude produce high-frequency noise

Unintended resonator

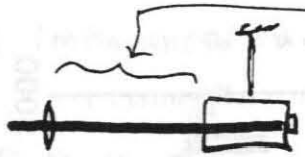

ALIGNED OPTICAL COMPONENT

TEST MASS

$\leftrightarrow X_p > \lambda$

Maximum fringes/sec $= f_p$

peak velocity of motion of components of unintended resonator

$$= \frac{V_p}{\lambda/2} = \frac{2\pi X_p f_0}{\lambda/2}$$

e.g. $X_p = 10\lambda$, $f_0 = 1$ Hz $\Rightarrow f_p \simeq 100$ Hz

("UPCONVERSION")

REDUCE EFFECT BY DAMPING RESONANCES (ESPECIALLY EFFECTIVE IF $X_p < \frac{\lambda}{2}$ — NO UPCONVERSION)

AND BY OPTICAL ISOLATION