CDS

TECHNICAL MEMORANDUM NO. CIT-CDS 93-008
May 13, 1993

"H∞ Control of Nonlinear Systems: A Class of Controllers"

Wei-Min Lu and John C. Doyle

Control and Dynamical Systems
California Institute of Technology
Pasadena, CA 91125

$\mathcal{H}_\infty$ Control of Nonlinear Systems: A Class of Controllers*

Wei-Min Lu† and John C. Doyle†

May 11, 1993

Abstract

The standard state space solutions to the $\mathcal{H}_\infty$ control problem for linear time invariant systems are generalized to nonlinear time-invariant systems. A class of nonlinear $\mathcal{H}_\infty$-controllers are parameterized as nonlinear fractional transformations on contractive, stable free nonlinear parameters. As in the linear case, the $\mathcal{H}_\infty$ control problem is solved by its reduction to four simpler special state space problems, together with a separation argument. Another byproduct of this approach is that the sufficient conditions for $\mathcal{H}_\infty$-control problem to be solved are also derived with this machinery. The solvability for nonlinear $\mathcal{H}_\infty$-control problem requires positive definite solutions to two parallel decoupled Hamilton-Jacobi inequalities and these two solutions satisfy an additional coupling condition. An illustrative example, which deals with a passive plant, is given at the end.

1 Introduction

An important issue in control system synthesis is to design a control system which attenuates the effects of external disturbances on some desired signals. The standard configuration we will consider is

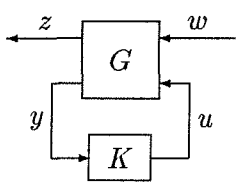

where G is the generalized plant and K is the controller to be designed; w is the vector of exogenous disturbance inputs and u is the vector of control inputs; z is the the vector of outputs to be regulated; and y is the vector of measured outputs based on which the control action is generated. A standard approach is to treat these signals in some normed space. If the

*Submitted to *32nd CDC* and *IEEE Transactions on Automatic Control.*

†Electrical Engineering 116-81, California Institute of Technology, Pasadena, CA 91125.

related signals are in $\mathcal{L}_2$-space, the performance of a system is measured by $\mathcal{L}_2$-gain, or $\mathcal{H}_\infty$-norm for a linear system. The $\mathcal{H}_\infty$-control problem is to find the controller(s) which stabilizes the closed loop system and minimizes its $\mathcal{L}_2$-gain. The general linear time invariant case was first solved in [9], but the resulting state-space formulas and derivations were substantially streamlined in [11]. In particular, it was shown that the $\mathcal{H}_\infty$ control problem, which requires the $\mathcal{H}_\infty$-norm of the closed loop system less than 1, is solvable if and only if the unique stabilizing solutions to two parallel algebraic Riccati equations are positive definite and the spectral radius of their product is less than 1. Furthermore, controllers which solve the $\mathcal{H}_\infty$ problem can be parameterized as a linear fractional transformation on a contractive, stable free parameter. The simplicity of this characterization together with its clear connections with traditional methods in optimal control have stimulated several attempts to generalize the $\mathcal{H}_\infty$ results in state space to nonlinear systems. (The reader is referred to [2, 12, 13] for the generalization in the context of operator theory.) We will abuse terminology and use the term nonlinear $\mathcal{H}_\infty$ to describe such efforts.

The study of dynamical systems which have finite $\mathcal{L}_2$-gains can be traced back to at least the early 70's. It is known that the finiteness of $\mathcal{L}_2$-gain and the dissipativity for a dynamical systems are strongly connected. A systematic exploration of general dissipative systems was performed by Willems [43]; some extensions can be found in [31, 20]. Recently, in the context of $\mathcal{L}_2$-gain analysis, van der Schaft extensively studied the $\mathcal{L}_2$-gain of nonlinear time-invariant (NLTI) control-affine systems by using dissipation theory [35, 36]. He reconfirmed that the $\mathcal{L}_2$-gains for a class of systems can be characterized by Hamilton-Jacobi equations (HJEs) or inequalities (HJIs). He also considered the solutions of HJEs in depth in terms of the related Hamiltonian vector field. Based on the analysis results, he investigated the $\mathcal{H}_\infty$ control problem in both state feedback and output feedback cases for a class of NLTI systems. He showed that a sufficient condition for the state feedback $\mathcal{H}_\infty$-control problem to be solvable is that the corresponding HJI has a positive solution. In the output feedback case, he asserted that the $\mathcal{H}_\infty$ control problem is locally solvable if it is solvable for the linearized system. But this assertion requires that the equilibrium point of the related Hamiltonian vector field be hyperbolic. Isidori and Astolfi [24, 25, 22] developed other sufficient conditions, which are less conservative, for the output control problem to be solvable from a game theoretical point of view (cf, [6]). They showed that the solution to the $\mathcal{H}_\infty$-control problem requires the existence of positive definite solutions of two hierarchically coupled HJIs. They also parameterized a class of controllers for the full information (FI) structure [25].

Ball, Helton and Walker worked on the nonlinear $\mathcal{H}_\infty$-control problem from another direction (see [4, 5]). They derived the necessary conditions for the existence of an output feedback controller such that the HJI related to the closed loop system has a positive smooth solution (specifically, the $\mathcal{H}_\infty$-control problem is solvable). Just as neat as in the linear case, these conditions are that two HJIs have positive solutions and the solutions are coupled locally. They confirmed the separation principle for the nonlinear $\mathcal{H}_\infty$-control system, and also provided a recipe to construct the controllers from the necessary conditions, although the stability issue is not explicitly considered there. It is noted that van der Schaft [37] and Isidori [23] also considered the same necessity aspect and derived the similar results.

Our goal in this paper is to systematically examine the nonlinear $\mathcal{H}_\infty$-control problem in state space and obtain an $\mathcal{H}_\infty$ controller parameterization. We use the state space approach to deal with this problem, following similar techniques used in the linear case [11]. Both G and K are nonlinear time-invariant and realized as affine state-space equations. Four special problems: full information (FI), disturbance feedforward (DF), full control (FC) and output estimation (OE), are also considered. The sufficient conditions for solvability are obtained and a parameterized class of controllers are derived for each $\mathcal{H}_\infty$-control problems (note that the FI problem has been solved by van der Schaft [36] and Isidori-Astolfi [25], see also Isidori [22]). Sufficient conditions for the output feedback $\mathcal{H}_\infty$-control problem to be solvable locally are also derived using this machinery. Like the conditions in the linear case, the solvability of the $\mathcal{H}_\infty$-control problem requires the positive definite solutions to two parallel decoupled HJIs with the same numbers of dependent parameters and these two solutions satisfy an additional condition. It can be shown that the conditions are equivalent to the ones in [22], which simplified the main result in [25]. A class of $\mathcal{H}_\infty$-controllers are parameterized as a nonlinear fractional transformation on contractive, stable free nonlinear operators. In each case, the stability of the resulting closed loop system is confirmed via the use of its hierarchical structure. Any concept or result in this paper is local unless otherwise noted. Specifically, problems DF, OE and the output feedback (OF) are treated locally.

This paper is organized as follows: In section 2, some background material related to the $\mathcal{L}_2$-gains is given. In section 3, the $\mathcal{H}_\infty$-control problem is stated and the structure of the general system is simplified. We also give the four nonlinear structures of special problems related to the general system: FI, DF, FC and OE. In section 4, the $\mathcal{H}_\infty$-control problem for four special structures are considered, both the solvability conditions and controller parameterizations are given. In section 5, the main results of this paper, solutions to the output feedback $\mathcal{H}_\infty$-control problem, are given. The solvability of this problem requires the coupled positive definite solutions to two decoupled HJIs. The standard separation principle in this case is re-examined and a class of $\mathcal{H}_\infty$-controllers are parameterized. As an illustrative example, the $\mathcal{H}_\infty$ control design for a passive system is conducted.

Conventions

- **Abbreviations**

  NLTI: Nonlinear Time-Invariant

  IDI: Integral Dissipation Inequality

  DDI: Differential Dissipation Inequality

  HJE: Hamilton-Jacobi Equation

  HJI: Hamilton-Jacobi Inequality

  FI: Full Information

  DF: Disturbance Feedforward

FC: Full Control

OE: Output Estimation

OF: Output Feedback

- **Notations.**

  $\mathbb{R}$ is the set of real numbers, $\mathbb{R}^+ := [0, \infty) \subset \mathbb{R}$.

  $\mathbb{R}^n$ is n-dimensional real Euclidean space; if $u \in \mathbb{R}^n$, then $\|u\|$ is Euclidean norm of u.

  $\mathbb{R}^{n\times m}$ is the set of real $n \times m$ matrices; if $A \in \mathbb{R}^{n\times m}$, then $A^T \in \mathbb{R}^{m\times n}$ is the transpose of A.

$$\mathcal{B}_r := \{x \in \mathbb{R}^n | \, \|x\| < r, \text{for some integer } n > 0\}$$

$$\mathcal{L}_2[0,T] := \{u : [0,T] \to \mathbb{R}^n | \int_0^T \|u(t)\|^2 \, dt < \infty\}$$

$$\mathcal{L}_2[0,\infty) := \{u : [0,\infty) \to \mathbb{R}^n | \int_0^\infty \|u(t)\|^2 \, dt < \infty\}$$

$$\mathcal{L}_2^e[0,\infty) := \{u : [0,\infty) \to \mathbb{R}^n | \int_0^T \|u(t)\|^2 \, dt < \infty, \forall T \in \mathbb{R}^+\}$$

$$\mathbf{C}^2 := \{f : \mathbb{R}^n \to \mathbb{R} | \frac{\partial f}{\partial x}(x), \frac{\partial^2 f}{\partial x^2}(x) \text{ exist and are continuous}\}$$

- **Interconnected Nonliner Systems**

  The following two notions about interconnected nonlinear systems are generalizations of their linear counterparts (see [33]).

  - **Nonlinear fractional transformation:** $\Omega(G, K)$

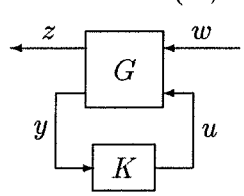

    Both G and K are nonlinear. If this feedback system is well posed, then the nonlinear fractional transformation $\Omega(G, K)$ on K with coefficient G is defined as the nonlinear operator such that

$$z = \Omega(G, K)w$$

for

$$\begin{bmatrix} z \\ y \end{bmatrix} = G \begin{bmatrix} w \\ u \end{bmatrix} \qquad u = Ky$$

Note that the notion of nonlinear fractional transformation was also introduced by Ball-Helton [2].

– **Nonlinear Redheffer product:** $\Sigma(M_1, M_2)$

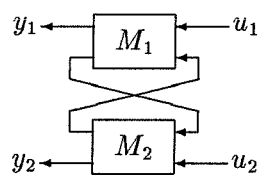

Both M_1 and M_2 are nonlinear. If the interconnected system is well posed, then the nonlinear Redheffer product $\Sigma(M_1, M_2)$ of M_1 and M_2 is defined to be the nonlinear operator such that:

$$\begin{bmatrix} y_1 \\ y_2 \end{bmatrix} = \Sigma(M_1, M_2) \begin{bmatrix} u_1 \\ u_2 \end{bmatrix}$$

with

$$\begin{bmatrix} y_1 \\ r \end{bmatrix} = M_1 \begin{bmatrix} u_1 \\ v \end{bmatrix}, \qquad \begin{bmatrix} v \\ y_2 \end{bmatrix} = M_2 \begin{bmatrix} r \\ u_2 \end{bmatrix}.$$

2 Preliminaries: $\mathcal{L}_2$-Gains of Nonlinear Systems

In this section, some background material about $\mathcal{L}_2$-gain analysis of nonlinear systems is provided. The reader is referred to Willems [43], van der Schaft [36] for more details.

Consider the following affine nonlinear time-invariant (NLTI) system:

$$G : \begin{cases} \dot{x} = f(x) + g(x)u \\ y = h(x) + k(x)u \end{cases}$$

Where $x \in \mathbb{R}^n$ is state vector, $u \in \mathbb{R}^p$ and $y \in \mathbb{R}^q$ are input and output vectors, respectively. We will assume $f, g, h, k \in \mathbf{C}^2$, and $f(0) = 0, h(0) = 0$. Therefore, $0 \in \mathbb{R}^n$ is the equilibrium of the system with $u = 0$.

The nonlinear operator G indicates the input-output relation of the above system with some fixed initial condition, i.e. $y = Gu$. The state transition function $\phi : \mathbb{R}^+ \times \mathbb{R}^n \times \mathbb{R}^p \to \mathbb{R}^n$ is so defined that $x = \phi(T, x_0, u^*)$ means that system G evolves from initial state x_0 to state x in time T under the control action u^*.

Definition 2.1 *(i) A system G (or $[f(x), g(x)]$) is* **reachable** *from 0 if for all $x \in \mathbb{R}^n$, there exist $T \in R^+$ and $u^*(t) \in \mathcal{L}_2[0,T]$ such that $x = \phi(T, 0, u^*)$;*

(ii) A system G (or $[h(x), f(x)]$) is (zero-state) **detectable** *if for all $x \in \mathbb{R}^n$, $h(\phi(t,x,0)) = 0 \Rightarrow \phi(t,x,0) \to 0$ as $t \to \infty$; it is (zero-state)* **observable** *if for all $x \in \mathbb{R}^n$, $h(\phi(t,x,0)) = 0 \Rightarrow \phi(t,x,0) = 0$ for all $t \in \mathbb{R}^+$.*

Definition 2.2 *A system G is said to have $\mathcal{L}_2$-gain less than or equal to 1 if*

$$\int_0^T \|y(t)\|^2 \, dt \leq \int_0^T \|u(t)\|^2 \, dt$$

for all $T \geq 0$ and $u(t) \in \mathcal{L}_2[0,T]$, and $y(t) = h(\phi(t,0,u(t)) + k(\phi(t,0,u(t))u(t)$.

Note that in the above definition, we take the initial state $x(0) = 0$. Define

$$V_a(x) := \sup_{u \in \mathcal{L}_2[0,\infty), x(0)=x} -\int_0^\infty (\|u(t)\|^2 - \|y(t)\|^2) dt.$$

Note that $V_a(x) \geq 0$ for all $x \in \mathbb{R}^n$, and if the system has $\mathcal{L}_2$-gain ≤ 1, then $V_a(0) = 0$. We will assume $V_a(0) = 0$ from now on.

As pointed out by Willems [43], $V_a(x) < \infty$ if and only if there exists a solution $V : \mathbb{R}^n \to \mathbb{R}^+$ with $V(0) = 0$ to the *integral dissipation inequality (IDI)*:

$$\mathcal{D}_I(V, x, u) := V(x) - V(x_0) - \int_0^T (\|u(t)\|^2 - \|y(t)\|^2) dt \leq 0$$

where $x = \phi(T, x_0, u(t))$ and $u(t) \in \mathcal{L}_2[0,T]$, i.e. system G is *dissipative* with respect to supply rate $\|u(t)\|^2 - \|y(t)\|^2$, and $V_a(\cdot)$ is also a solution. Moreover, the solutions to IDI form a convex set, and any solution $V(x) \geq 0$ for $x \in \mathbb{R}^n$ with $V(0) = 0$ satisfies $V(x) \geq V_a(x)$.

Lemma 2.1 (Willems [42, 43])

(i) System G has $\mathcal{L}_2$-gain ≤ 1 **if** *$V_a(x) < \infty$, for all $x \in \mathbb{R}^n$.*

(ii) If system G is reachable from 0, then it has $\mathcal{L}_2$-gain ≤ 1 **only if** *$V_a(x) < \infty$, for all $x \in \mathbb{R}^n$.*

Proof **(IF)** $V_a(x) < \infty$ satisfies the above IDI, so

$$\int_0^T (\|u(t)\|^2 - \|y(t)\|^2) dt \geq V_a(x(T)) - V_a(0) = V_a(x(T)) \geq 0$$

for all $T \in \mathbb{R}^+$.

(ONLY IF) Take $x \in \mathbb{R}^n$, by the reachability assumption, there exist $T \in \mathbb{R}^+$ and $u_1(t) \in \mathcal{L}_2[-T, 0)$ such that $x(0) = x$ for $x(-T) = 0$. Now take any $u_2(t) \in \mathcal{L}_2[0, \infty)$. Define $u \in \mathcal{L}_2[-T, \infty)$ as

$$u(t) = \begin{cases} u_1(t), & \text{if } t \in [-T, 0) \\ u_2(t), & \text{if } t \in [0, \infty) \end{cases}$$

Since system has $\mathcal{L}_2$-gain ≤ 1, for all $t \geq 0$

$$-\int_0^t (\|u_2(t)\|^2 - \|y(t)\|^2)dt \leq \int_{-T}^0 (\|u(t)\|^2 - \|y(t)\|^2)dt$$

so

$$V_a(x) = \sup_{u \in \mathcal{L}_2[0,\infty), x(0)=x} -\int_0^\infty (\|u(t)\|^2 - \|y(t)\|^2)dt \leq \int_{-T}^0 (\|u_1(t)\|^2 - \|y(t)\|^2)dt < \infty.$$

□

Thus, if the system is reachable from 0, then $\mathcal{L}_2$-gain ≤ 1 if and only if the system is dissipative with respect to supply rate $\|u(t)\|^2 - \|y(t)\|^2$; also $V_a(x) \geq 0$ is well-defined for all $x \in \mathbb{R}^n$, and there exists a solution $V(x) \geq 0$ to the above IDI. The following lemma characterizes a class of nonlinear systems having $\mathcal{L}_2$-gain ≤ 1.

Lemma 2.2 *Consider a system G with $R(x) := I - k^T(x)k(x) > 0$ for all $x \in \mathbb{R}^n$, suppose G has $\mathcal{L}_2$-gain ≤ 1.*

i) If $V_a(x)$ is differentiable with respect to $x \in \mathbb{R}^n$, then it solves the following Hamilton-Jacobi equation (HJE)*:*

$$\mathcal{H}(V,x) := \frac{\partial V}{\partial x}(x)(f(x) - g(x)R^{-1}(x)k^T(x)h(x)) + \frac{1}{4}\frac{\partial V}{\partial x}(x)g(x)R^{-1}(x)g^T(x)\frac{\partial V^T}{\partial x}(x) +$$
$$h^T(x)(I - k(x)k^T(x))^{-1}h(x) = 0, \quad V(0) = 0;$$

ii) If $V(x)$ is differentiable with respect to $x \in \mathbb{R}^n$, then it satisfies the following Hamilton-Jacobi inequality (HJI)*:*

$$\mathcal{H}(V,x) = \frac{\partial V}{\partial x}(x)(f(x) - g(x)R^{-1}(x)k^T(x)h(x)) + \frac{1}{4}\frac{\partial V}{\partial x}(x)g(x)R^{-1}(x)g^T(x)\frac{\partial V^T}{\partial x}(x) +$$
$$h^T(x)(I - k(x)k^T(x))^{-1}h(x) \leq 0, \quad V(0) = 0.$$

Proof Part (i) follows from the same argument used in [26, 1]. As for Part (ii), since $V(x)$ is differentiable, the IDI reduces to the following *differential dissipation inequality (DDI)*:

$$\mathcal{D}_D(V,x,u) := \frac{\partial V}{\partial x}(x)(f(x) + g(x)u) - \|u(t)\|^2 + \|y(t)\|^2 = \dot{V}(x) - \|u(t)\|^2 + \|y(t)\|^2 \leq 0$$

It follows that $\mathcal{D}_D(V,x,u) \leq 0$ for all $u(\cdot) \in \mathcal{L}_2^e[0,\infty)$ if and only if

$$\sup_{u(\cdot) \in \mathcal{L}_2^e[0,\infty)} \mathcal{D}_D(V,x,u) \leq 0$$

Let

$$\frac{\partial \mathcal{D}_D(V,x,u)}{\partial u}\Big|_{u=u^*} = 0$$

then

$$u^* = -R^{-1}(x)k^T(x)h^T(x) - \frac{1}{2}R^{-1}(x)g^T(x)\frac{\partial V^T}{\partial x}(x)$$

Thus,

$$\mathcal{D}_D(V, x, u^*) = \sup_{u \in \mathcal{L}_2^e[0,\infty)} \mathcal{D}_D(V, x, u) \leq 0 \qquad \Longleftrightarrow \qquad \mathcal{H}(V, x) \leq 0.$$

□

It is easy to see that the converse results in the above lemma are also true ([26, 1]). The following statement follows from the above proof.

Corollary 2.3 *Suppose $\pi(x)$ is a function defined on $\mathbb{R}^n$ with $\pi(0) = 0$, then $V(x)$ with $V(0) = 0$ solves HJI: $\mathcal{H}(V, x) + \pi(x) \leq 0$ if and only if it satisfies DDI: $\mathcal{D}_D(V, x, u) + \pi(x) \leq 0$, or*

$$\frac{\partial V}{\partial x}(x)(f(x) + g(x)u) \leq \|u(t)\|^2 - \|y(t)\|^2 - \pi(x), \qquad V(0) = 0$$

for all $u(\cdot) \in \mathcal{L}_2^e[0, \infty)$. Moreover, if $\pi(x) \geq 0$ and $V(x) \geq 0$ for all $x \in \mathbb{R}^n$, then the $\mathcal{L}_2$-gain ≤ 1.

Corollary 2.4 *The solutions to HJI: $\mathcal{H}(V, x) \leq 0$ form a convex set; and the subset of non-negative solutions is also convex. More generally, the solutions to the following HJI:*

$$\frac{\partial V}{\partial x}(x)f(x) + \frac{1}{4}\frac{\partial V}{\partial x}(x)R(x)\frac{\partial V^T}{\partial x}(x) + q(x) \leq 0$$

with matrix $R(x) = R^T(x) \geq 0$ and $q(0) = 0$ form a convex set.

The above discussion can be summarized as following Theorem.

Theorem 2.5 (van der Schaft [36]) *Consider system G, suppose it is reachable from 0, then each of the following implications holds under the specified condition.*

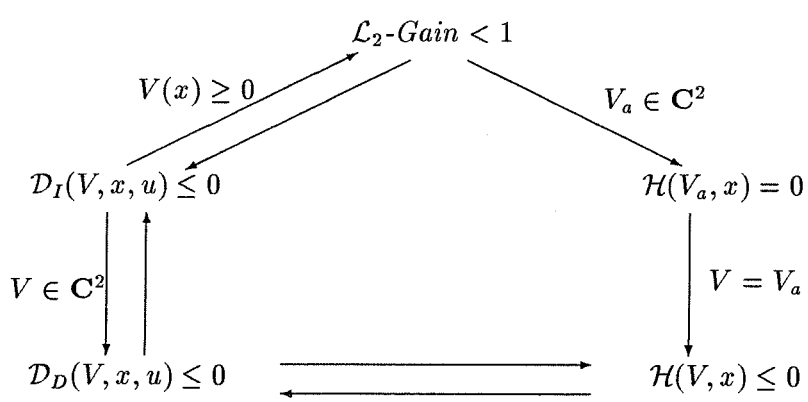

Recall that $V : \mathbb{R}^n \to \mathbb{R}^+$ is locally positive-definite if there exists $r > 0$ such that for $x \in \mathcal{B}_r$, $V(x) = 0 \Rightarrow x = 0$; it is globally positive-definite if $V(x) = 0 \Rightarrow x = 0$, and $\lim_{x\to\infty} V(x) = \infty$. The following lemma, which is due to Hill and Moylan [20] (see also [36]), establishes the relationship between finite gain (stability) and asymptotic stability.

Lemma 2.6 *(i) Suppose system G with $u = 0$ is asymptotically stable at 0, then any $V(x)$ with $V(0) = 0$ satisfying IDI: $\mathcal{D}_I(V, x, u) \leq 0$ is non-negative. Specially, if $V(x)$ satisfies HJI: $\mathcal{H}(V, x) \leq 0$ with $V(0) = 0$, then $V(x) \geq 0$.*

(ii) Assume system G is zero-state detectable. If there is a positive definite solution $V(x)$ to HJI: $\mathcal{H}(V, x) \leq 0$, then the system G with $u = 0$ is asymptotically stable at 0.

Definition 2.3 *The class $\mathcal{FG}$ of (affine) NLTI systems is defined as*

$$\mathcal{FG} := \{G | G \text{ is asymptotically stable and related HJI has a positive definite solution}\}.$$

Therefore, if $G \in \mathcal{FG}$ with state x, then there exists a positive definite $V(x)$ such that $\dot{V}(x) \leq \|u\|^2 - \|y\|^2$ (here $y = Gu$), so it has $\mathcal{L}_2$-gain ≤ 1. Moreover, it can be justified that for all $Q \in \mathcal{FG}$ Q can be assumed to have the following state space realization,

$$\begin{cases} \dot{x} = a(x) + b(x)u \\ y = c(x) \end{cases}$$

In fact, consider the system G, construct system G_N:

$$\begin{cases} \dot{x} = f_N(x) + g_N(x)u \\ y_N = h_N(x) \end{cases}$$

with

$$f_N(x) = f(x) - g(x)(I - k^T(x)k(x))^{-1}k^T(x)h(x),$$

$$g_N(x) = g(x)(I - k^T(x)k(x))^{-1/2}$$

and

$$h_N(x) = (I - k(x)k^T(x))^{-1/2}h(x).$$

System G can be simplified as G_N in the following sense.

Theorem 2.7 *G_N is of $\mathcal{L}_2$-gain ≤ 1, and the related HJE (or HJI) has solution $V_a \geq 0$ (or $V \geq 0$) if and only if G has $\mathcal{L}_2$-gain ≤ 1, and its corresponding HJE (or HJI) also has the same solution. Moreover, G_N is zero-state detectable if and only if G is.*

Proof Simple algebra shows both systems correspond to the same HJE(or HJI). We only need to show that system G_N is zero-state detectable if and only if G is.

Notice that

$$h_N(x) = (I - k(x)k^T(x))^{-1/2}h(x) = 0 \quad \Leftrightarrow \quad h(x) = 0$$

so in this case

$$f_N(x) = f(x) - g(x)R^{-1}(x)k^T(x)h(x) = f(x)$$

$$\begin{cases} \dot{x} = f_N(x) \\ y_N = h_N(x) = 0 \end{cases} \quad \Leftrightarrow \quad \begin{cases} \dot{x} = f(x) \\ y = h(x) = 0 \end{cases}$$

so G_N is detectable if and only if G is. □

3 $\mathcal{H}_\infty$-Control: Problem Statement and Simplifications

3.1 $\mathcal{H}_\infty$-Control Problem

The basic block diagram considered in the $\mathcal{H}_\infty$-control synthesis problem is

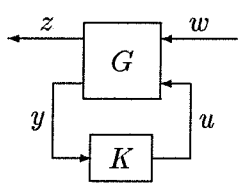

where G is the nonlinear plant with two sets of inputs: the exogenous disturbance inputs w and the control inputs u, and two sets of outputs: the measured outputs y and the regulated outputs z. And K is the controller to be designed. Both G and K are nonlinear time-invariant and can be realized as affine state-space equations:

$$G : \begin{cases} \dot{x} &= f(x) &+ & g_1(x)w &+ & g_2(x)u \\ z &= h_1(x) &+ & k_{11}(x)w &+ & k_{12}(x)u \\ y &= h_2(x) &+ & k_{21}(x)w &+ & k_{22}(x)u \end{cases}$$

where $f, g_i, h_i, k_{ij} \in \mathbf{C}^2$ and $f(0) = 0, h_1(0) = 0, h_2(0) = 0$; x, w, u, z, and y are assumed to have dimensions n, p_1, p_2, q_1, and q_2, respectively.

$$K : \begin{cases} \dot{\hat{x}} &= a(\hat{x}) &+ & b(\hat{x})y \\ u &= c(\hat{x}) &+ & d(\hat{x})y \end{cases}$$

with $a(0) = 0, c(0) = 0$.

The initial states for both plant and controller are $x(0) = 0$ and $\hat{x}(0) = 0$. The closed loop system will be denoted as nonlinear operator $\Omega(G, K)$ which represents the input/output relation: $z = \Omega(G, K)w$.

$\mathcal{H}_\infty$**-Control Problem**: Find a feedback controller K (or a class controllers) if any, such that the closed-loop system $\Omega(G, K)$ is asymptotically stable with $w = 0$ and has $\mathcal{L}_2$-gain ≤ 1, i.e.

$$\int_0^T (\|w(t)\|^2 - \|z(t)\|^2)dt \geq 0;$$

for all $T \in \mathbb{R}^+$.

The following assumptions on system structure are made:

[A1a]: $k_{11}(x)k_{11}^T(x) < I$ for all $x \in \mathbb{R}^n$.

[A2a]: $\text{rank}(k_{12}(x)) = p_2$ for all $x \in \mathbb{R}^n$.

[A3a]: $\text{rank}(k_{21}(x)) = q_2$ for all $x \in \mathbb{R}^n$.

3.2 System Simplification

Suppose the $\mathcal{H}_\infty$-control problem for G is solvable, and the corresponding feedback system is well-posed. The following result structurally simplifies the original system.

Theorem 3.1 *Consider system G under the above assumptions, then it can be converted to a system with following structure*

$$\begin{cases} \dot{x} &= f(x) + g_1(x)w + g_2(x)u \\ z &= h_1(x) + k_{12}(x)u \\ y &= h_2(x) + k_{21}(x)w \end{cases}$$

Where

[A1]: $k_{11}(x) = 0, k_{22}(x) = 0;$

[A2]: $k_{12}^T(x) \begin{bmatrix} h_1(x) & k_{12}(x) \end{bmatrix} = \begin{bmatrix} 0 & I \end{bmatrix};$

[A3]: $\begin{bmatrix} g_1(x) \\ k_{21}(x) \end{bmatrix} k_{21}^T(x) = \begin{bmatrix} 0 \\ I \end{bmatrix};$

Proof The ideas are similar to the ones in the linear system simplification (Safonov et al [34]), the involved process is omitted here. □

From now on, the system to be considered has this simplified structure.

3.3 Special Problems

As in the linear case [11], we will consider four special problems which will help us to examine the insights of the constructions and structures of nonlinear $\mathcal{H}_\infty$-controllers, especially to reveal the separation property for nonlinear $\mathcal{H}_\infty$-control systems. Practically, as to be shown by some examples, they are also very important in their own right.

- **Full Information (FI) Problem.**

  In this case, both state x and disturbance w are directly available to controller, the plant is

$$G_{FI}: \begin{cases} \dot{x} &= f(x) &+ & g_1(x)w &+ & g_2(x)u \\ z &= h_1(x) &+ & & & k_{12}(x)u \\ y &= \begin{bmatrix} x \\ 0 \end{bmatrix} &+ & \begin{bmatrix} 0 \\ I \end{bmatrix} w & & \end{cases}$$

  with

  [A2]: $k_{12}^T(x) \begin{bmatrix} h_1(x) & k_{12}(x) \end{bmatrix} = \begin{bmatrix} 0 & I \end{bmatrix}$;

- **Full Control (FC) Problem**

  The control action has full access to both state x through output injection and the regulated output.

$$G_{FC}: \begin{cases} \dot{x} &= f(x) &+ & g_1(x)w &+ & \begin{bmatrix} I & 0 \\ 0 & I \end{bmatrix} \begin{matrix} u \\ u \end{matrix} \\ z &= h_1(x) &+ & & & \\ y &= h_2(x) &+ & k_{21}(x)w & & \end{cases}$$

  with

  [A3]: $\begin{bmatrix} g_1(x) \\ k_{21}(x) \end{bmatrix} k_{21}^T(x) = \begin{bmatrix} 0 \\ I \end{bmatrix}$;

- **Disturbance Feedforward (DF) Problem**

$$G_{DF}: \begin{cases} \dot{x} &= f(x) &+ & g_1(x)w &+ & g_2(x)u \\ z &= h_1(x) &+ & & & k_{12}(x)u \\ y &= h_0(x) &+ & w & & \end{cases}$$

  where

  [A2]: $k_{12}^T(x) \begin{bmatrix} h_1(x) & k_{12}(x) \end{bmatrix} = \begin{bmatrix} 0 & I \end{bmatrix}$, and

  [A6a]: $h_0(x)$ is such that $h_0(0) = 0$ and $\dot{x} = f(x) + g_1(x)h_0(x)$ is asymptotically stable at 0.

- **Output Estimation (OE) Problem**

$$G_{OE}: \begin{cases} \dot{x} &= f(x) &+ & g_1(x)w &+ & g_0(x)u \\ z &= h_1(x) &+ & & & u \\ y &= h_2(x) &+ & k_{21}(x)w & & \end{cases}$$

The structural assumptions for this structure are

[A3]: $\begin{bmatrix} g_1(x) \\ k_{21}(x) \end{bmatrix} k_{21}^T(x) = \begin{bmatrix} 0 \\ I \end{bmatrix}$;

[A7]: $g_0(x)$ is such that $\dot{x} = f(x) + g_0(x)h_1(x)$ is asymptotically stable at 0.

4 $\mathcal{H}_\infty$-Control Synthesis: Solutions to Special Problems

Unlike linear case, the solutions for the special $\mathcal{H}_\infty$-control problems cannot be obtained by duality (if there is any). This section is devoted to the discussion of different special problems.

4.1 Full Information Problem

Consider

$$G_{FI}: \begin{cases} \dot{x} = f(x) + g_1(x)w + g_2(x)u \\ z = h_1(x) + k_{12}(x)u \\ y = \begin{bmatrix} x \\ 0 \end{bmatrix} + \begin{bmatrix} 0 \\ I \end{bmatrix} w \end{cases}$$

The assumptions relevant to FI problem are inherited from OF problem as follows.

[A2]: $k_{12}^T(x) \begin{bmatrix} h_1(x) & k_{12}(x) \end{bmatrix} = \begin{bmatrix} 0 & I \end{bmatrix}$;

[A4]: $[h_1(x), f(x)]$ is zero-state detectable.

The $\mathcal{H}_\infty$-control problem for FI was first explicitly introduced and solved by Van der Schaft [35, 36] (see also [22]). The solutions to $\mathcal{H}_\infty$-control problem are related to the following HJI:

$$\mathcal{H}_{FI}(V,x) := \frac{\partial V}{\partial x}(x)f(x) + \frac{1}{4}\frac{\partial V}{\partial x}(x)(g_1(x)g_1^T(x) - g_2(x)g_2^T(x))\frac{\partial V^T}{\partial x}(x) + h_1^T(x)h_1(x) \leq 0,$$

Note that the set of solutions to this HJI is not convex in general (Corollary 2.4). The following Theorem reveals more properties related to HJI for FI.

Theorem 4.1 *(i) $\mathcal{H}_{FI}(V,x) \leq 0$ has a solution $V(x)$ with $V(0) = 0$ if and only if there is $F_0(x)$ such that*

$$\mathcal{H}_{SF}(V,F_0,x) := \frac{\partial V}{\partial x}(x)(f(x) + g_2(x)F_0(x)) + \frac{1}{4}\frac{\partial V}{\partial x}(x)g_1(x)g_1^T(x)\frac{\partial V^T}{\partial x}(x) +$$
$$+(h_1(x) + k_{12}(x)F_0(x))^T(h_1(x) + k_{12}(x)F_0(x)) \leq 0.$$

Moreover, if $V(x)$ solves $\mathcal{H}_{FI}(V,x) \leq 0$ with $V(0) = 0$, then $F_0(x)$ can be taken as

$$F_0(x) = -\frac{1}{2}g_2^T(x)\frac{\partial V^T}{\partial x}(x).$$

(ii) If $[h_1(x), f(x)]$ is assumed to be zero-state observable, then any solution $V(x) \geq 0$ to $\mathcal{H}_{FI}(V,x) \leq 0$ with $V(0) = 0$ is positive definite.

Property (ii) insures that the HJI corresponding to FI has a positive definite solution under some mild assumption (observability). This justifies the assumption that HJI has positive definite solutions in the next Theorem.

Proof (i) Note that there exists $F(x)$ such that

$$\mathcal{H}_{SF}(V, F_0, x) \leq 0$$

if and only if

$$0 \geq \inf_{F_0(x)} \mathcal{H}_{SF}(V, F_0, x) = \mathcal{H}_{SF}(V, F_0, x)|_{F_0(x)=-\frac{1}{2}g_2^T(x)\frac{\partial V^T}{\partial x}(x)} = \mathcal{H}_{FI}(V, x)$$

The latter can be confirmed by taking

$$\frac{\partial \mathcal{H}_{SF}}{\partial F_0}(V, F_0, x) = 0$$

for fixed x.

(ii) Suppose $V(x) \geq 0$ is such that $\mathcal{H}_{FI}(V, x) \leq 0$. Then

$$\begin{aligned}
\dot{V}(x) &= \frac{\partial V}{\partial x}(x)(f(x) + g_1(x)w + g_2(x)u) \\
&\leq -(\frac{1}{4}\frac{\partial V}{\partial x}(x)(g_1(x)g_1^T(x) - g_2(x)g_2^T(x))\frac{\partial V^T}{\partial x}(x) + h_1^T(x)h_1(x)) + \frac{\partial V}{\partial x}(x)(g_1(x)w + g_2(x)u) \\
&= \left\| u + \frac{1}{2}g_2^T(x)\frac{\partial V^T}{\partial x}(x) \right\|^2 - \left\| w - \frac{1}{2}g_1^T(x)\frac{\partial V^T}{\partial x}(x) \right\|^2 - \|z\|^2 + \|w\|^2
\end{aligned}$$

If $u = -\frac{1}{2}g_2^T(x)\frac{\partial V^T}{\partial x}(x)$ then

$$\dot{V}(x) \leq -\|z\|^2 + \|w\|^2$$

Since $V(x) \geq 0$, the closed-loop system

$$\begin{cases} \dot{x} = f(x) - \frac{1}{2}g_2(x)g_2^T(x)\frac{\partial V^T}{\partial x}(x) + g_1(x)w \\ z = h_1(x) - \frac{1}{2}k_{12}(x)g_2^T(x)\frac{\partial V^T}{\partial x}(x) \end{cases}$$

is dissipative with respect to supply rate $\|w\|^2 - \|z\|^2$. Thus, for all $x \in \mathbb{R}^n$,

$$\begin{aligned}
V(x) &\geq \sup_{w \in \mathcal{L}_2[0,\infty), x(0)=x} -\int_0^\infty (\|w(t)\|^2 - \|z(t)\|^2)dt \\
&\geq -\int_0^\infty (0 - \|z(t)\|^2)dt = \int_0^\infty (\|z(t)\|^2)dt
\end{aligned}$$

$$V(x) = 0 \Longrightarrow \|z\|^2 = \|h_1(x)\|^2 + \tfrac{1}{4}\left\|g_2^T(x)\tfrac{\partial V^T}{\partial x}(x)\right\|^2 = 0, \text{ so}$$

$$\begin{cases} \dot{x} = f(x) - \frac{1}{2}g_2(x)g_2^T(x)\frac{\partial V^T}{\partial x}(x) \\ z = h_1(x) - \frac{1}{2}k_{12}(x)g_2^T(x)\frac{\partial V^T}{\partial x}(x) = 0 \end{cases} \Leftrightarrow \begin{cases} \dot{x} = f(x) \\ h_1(x) = 0 \end{cases}$$

So $x = 0$ by observability assumption. (Moreover, the closed-loop system is also observable.) $V(x)$ is (locally) positive definite. □

The solutions to the $\mathcal{H}_\infty$-control problem for FI in the above setting are restated as following two Theorems for completeness (see also [35, 36, 22, 25]).

Theorem 4.2 ([35, 36, 22]) *Consider G_{FI}, suppose there exists $V(x) \geq 0$ positive definite such that $\mathcal{H}_{FI}(V, x) \leq 0$, with $V(0) = 0$. Then the $\mathcal{H}_\infty$-control problem for FI is solvable. Moreover, the state feedback*

$$u = -\frac{1}{2}g_2^T(x)\frac{\partial V^T}{\partial x}(x)$$

solves FI $\mathcal{H}_\infty$-control problem.

Proof (i) **$\mathcal{L}_2$-gain ≤ 1.** Use the same argument as above, if $u = -\frac{1}{2}g_2^T(x)\frac{\partial V^T}{\partial x}(x)$ then

$$\dot{V}(x) \leq -\|z\|^2 + \|w\|^2$$

It follows that

$$\int_0^T (\|w\|^2 - \|z\|^2)dt \geq V(x(T)) - V(0) = V(x(T)) \geq 0.$$

for all $T \geq 0$.

(ii) $\dot{x} = f(x) - \frac{1}{2}g_2(x)g_2^T(x)\frac{\partial V^T}{\partial x}(x)$ **is asymptotically stable.**
In fact, if $u = -\frac{1}{2}g_2^T(x)\frac{\partial V^T}{\partial x}(x)$, then the closed-loop system is

$$\begin{cases} \dot{x} = f(x) - \frac{1}{2}g_2(x)g_2^T(x)\frac{\partial V^T}{\partial x}(x) + g_1(x)w \\ z = h_1(x) - \frac{1}{2}k_{12}(x)g_2^T(x)\frac{\partial V^T}{\partial x}(x) \end{cases}$$

$V(x)$ is positive definite; it can be used as Lyapunov function.
Set $w = 0$,

$$\dot{V}(x) \leq \|w\|^2 - \|z\|^2 = -\|z\|^2 \leq 0.$$

So $\dot{V}(x) = 0 \Rightarrow z = 0 \Rightarrow x \to 0$ as $t \to \infty$ by the detectability of the closed loop system. LaSalle's Theorem implies $\dot{x} = f(x) - \frac{1}{2}g_2(x)g_2^T(x)\frac{\partial V^T}{\partial x}(x)$ is asymptotically stable.

□

The following result parameterizes a class of FI $\mathcal{H}_\infty$-controllers.

Theorem 4.3 (Isidori-Astolfi [25]) *Under the assumptions of Theorem 4.2, for all $Q \in \mathcal{FG}$, the controller*

$$u = -\frac{1}{2}g_2^T(x)\frac{\partial V^T}{\partial x}(x) + Q(w - \frac{1}{2}g_1^T(x)\frac{\partial V^T}{\partial x}(x))$$

solves the $\mathcal{H}_\infty$ control problem for FI.

Remark 4.1 If $V(x)$ is globally positive definite, and $H_{FI}(V,x) \leq 0$ for all $x \in \mathbb{R}^n$, then Theorem 4.1 gives the global solution. Moreover, if $Q \in \mathcal{FG}$ globally, then Theorem 4.3 also gives the global solutions. The same thing happens for FC $\mathcal{H}_\infty$-control problem to be investigated later.

4.2 Disturbance Feedforward Problem

Consider

$$G_{DF}: \begin{cases} \dot{x} &= f(x) + g_1(x)w + g_2(x)u \\ z &= h_1(x) + k_{12}(x)u \\ y &= h_0(x) + w \end{cases}$$

The assumptions relevant to DF problem are as follows:

[A2]: $k_{12}^T(x)\begin{bmatrix} h_1(x) & k_{12}(x) \end{bmatrix} = \begin{bmatrix} 0 & I \end{bmatrix}$;

[A4]: $[h_1(x), f(x)]$ is (locally) zero-state detectable.

[A6a]: $\dot{x} = f(x) + g_1(x)h_0(x)$ is (locally) asymptotically stable at 0.

By converse Lyapunov Theorem(cf. [18, 39]), assumption **[A6a]** implies that there exists a locally positive definite function $U : \mathbb{R}^n \to \mathbb{R}^+$, such that

$$L_D(U,x) := \frac{\partial U}{\partial x}(x)(f(x) + g_1(x)h_0(x))$$

is negative definite. Furthermore, assume

[A6]: $\dot{x} = f(x) + g_1(x)h_0(x)$ is (locally) exponentially stable at 0.

Note that under the assumption **[A6]**, the Hessian matrix of $L_D(U,x)$ is nonsingular at $x = 0$ by suitably choosing the Lyapunov function $U(x)$. And if $U(x)$ has these properties, so does $kU(x)$ for all constant $k > 0$.

Theorem 4.4 *Consider G_{DF}, suppose there exists a smooth solution $V(0) \geq 0$ to $\mathcal{H}_{FI}(V,x) \leq 0$ with $V(0) = 0$. Then the $\mathcal{H}_\infty$-control for DF problem is (locally) solvable. Moreover, when the state of the closed loop system stays in $\mathcal{B}_r$ for some $r > 0$, the controller given by*

$$\begin{cases} \dot{\tilde{x}} = f(\tilde{x}) - g_1(\tilde{x})h_0(\tilde{x}) + g_0(\tilde{x})F_0(\tilde{x}) + g_1(\tilde{x})y \\ u = F_0(\tilde{x}) \end{cases} \qquad F_0(\tilde{x}) := -\frac{1}{2}g_2^T(\tilde{x})\frac{\partial V^T}{\partial \tilde{x}}(\tilde{x})$$

solves the $\mathcal{H}_\infty$-control problem.

Consider the system

$$P_{DF}: \begin{cases} \dot{\tilde{x}} &= f(\tilde{x}) - g_1(\tilde{x})h_0(\tilde{x}) + g_1(\tilde{x})y + g_2(\tilde{x})u \\ u &= u \\ y_0 &= \begin{bmatrix} \tilde{x} \\ -h_0(\tilde{x}) \end{bmatrix} + \begin{bmatrix} 0 \\ I \end{bmatrix} y \end{cases}$$

We have the following lemma.

Lemma 4.5 *For any $V(x) \geq 0$ satisfies above HJI, let $x, \tilde{x}$ be states of systems G_{DF} and P_{DF}, let $e = x - \tilde{x}$. Define*

$$S(U, e, \tilde{x}) := \frac{\partial U}{\partial e}(e)[(f(x) - f(\tilde{x})) - g_1(\tilde{x})(h_0(x) - h_0(\tilde{x}))];$$

$$T(U, e, \tilde{x}) := S(e, \tilde{x}) - \frac{1}{2}\frac{\partial U}{\partial e}(e)(g_2(x) - g_2(\tilde{x}))g_2^T(\tilde{x})\frac{\partial V^T}{\partial \tilde{x}}(\tilde{x});$$

$$R_1(e, \tilde{x}) := h_1^T(x)h_1(x) - h_1^T(\tilde{x})h_1(\tilde{x});$$

$$R_2(e, \tilde{x}) := \frac{1}{4}\left\|(g_1^T(x) - g_1^T(\tilde{x}))\frac{\partial U^T}{\partial e}(e)\right\|^2 + \frac{1}{2}\frac{\partial V}{\partial \tilde{x}}(\tilde{x})g_1(\tilde{x})(g_1^T(x) - g_1^T(\tilde{x}))\frac{\partial U^T}{\partial e}(e) +$$

$$-\frac{1}{2}\frac{\partial V}{\partial \tilde{x}}(\tilde{x})g_2(\tilde{x})(g_2^T(x) - g_2^T(\tilde{x}))\frac{\partial U^T}{\partial e}(e).$$

Then there exists $U(x)$ such that for all $(x, \tilde{x}) \in \mathcal{B}_r$ with some $r > 0$,
(i) $S(U, e, \tilde{x}) \leq 0$,
(ii) $S(U, e, \tilde{x}) + R_1(e, \tilde{x}) + R_2(e, \tilde{x}) \leq 0$,
(iii) $T(U, e, \tilde{x})$ is negative definite.

Proof Just note that $S(U, e, \tilde{x})$ has the same Hessian matrix with respect to e at $(e, \tilde{x}) = 0$ as $L_D(U, e)$ does. Also if $U(x)$ is such that $L_D(U, e)$ has negative definite Hessian matrix with respect to e at 0, so is $kU(x)$ for all constant $k > 0$. □

Proof of Theorem 4.4

Consider $\Sigma(G_{DF}, P_{DF})$, which has following realization

$$\begin{cases} \dot{x} &= f(x) + g_1(x)w + g_2(x)u \\ \dot{\tilde{x}} &= (f(\tilde{x}) - g_1(\tilde{x})h_0(\tilde{x}) + g_1(\tilde{x})h_0(x)) + g_1(\tilde{x})w + g_2(\tilde{x})u \\ z &= h_1(x) + k_{12}(x)u \\ y &= \begin{bmatrix} \tilde{x} \\ h_0(x) - h_0(\tilde{x}) \end{bmatrix} + \begin{bmatrix} 0 \\ I \end{bmatrix} w \end{cases}$$

Let $e := x - \tilde{x}$, define

$$W(e, \tilde{x}) := U(e) + V(\tilde{x})$$

where $U(x)$ is given in the above lemma, then $W(e, \tilde{x}) \geq 0$, and $W(0,0) = U(0) + V(0) = 0$. For all $(x, \tilde{x}) \in \mathcal{B}_r$.

$$\begin{aligned}
\dot{W}(e, \tilde{x}) &= \dot{U}(e) + \dot{V}(\tilde{x}) \\
&= \frac{\partial U}{\partial e}(e)((f(x) - f(\tilde{x})) - g_1(\tilde{x})(h_0(x) - h_0(\tilde{x})))+ \\
&\quad + \frac{\partial U}{\partial e}(e)((g_1(x) - g_1(\tilde{x}))w + (g_2(x) - g_2(\tilde{x}))u)+ \\
&\quad + \frac{\partial V}{\partial \tilde{x}}(\tilde{x})(f(\tilde{x}) + g_1(\tilde{x})w + g_2(\tilde{x})u) + \frac{\partial V}{\partial \tilde{x}}(\tilde{x})g_1(\tilde{x})(h_0(x) - h_0(\tilde{x})) \\
&\leq S(U, e, \tilde{x}) + \frac{\partial U}{\partial e}(e)(g_1(x) - g_1(\tilde{x}))w + \frac{\partial U}{\partial e}(e)(g_2(x) - g_2(\tilde{x}))u+ \\
&\quad - \frac{1}{4}\frac{\partial V}{\partial e}(e)(g_1(\tilde{x})g_1^T(\tilde{x}) - g_2(\tilde{x})g_2^T(\tilde{x}))\frac{\partial V^T}{\partial e}(e) - h_1^T(\tilde{x})h_1(\tilde{x})+ \\
&\quad + \frac{\partial V}{\partial \tilde{x}}(\tilde{x})(g_1(\tilde{x})w + g_2(\tilde{x})u) + \frac{\partial V}{\partial \tilde{x}}(\tilde{x})g_1(\tilde{x})(h_0(x) - h_0(\tilde{x})) \\
&= S(U, e, \tilde{x}) + R_1(e, \tilde{x}) + R_2(e, \tilde{x}) \\
&\quad + \left\| u + \frac{1}{2}g_2^T(\tilde{x})\frac{\partial V^T}{\partial \tilde{x}}(\tilde{x}) + \frac{1}{2}(g_2^T(x) - g_2^T(\tilde{x}))\frac{\partial U^T}{\partial e}(e) \right\|^2 - \frac{1}{4}\left\| (g_2^T(x) - g_2^T(\tilde{x}))\frac{\partial U^T}{\partial e}(e) \right\|^2 + \\
&\quad - \left\| w - \frac{1}{2}g_1^T(\tilde{x})\frac{\partial V^T}{\partial \tilde{x}}(\tilde{x}) - \frac{1}{2}(g_1^T(x) - g_1^T(\tilde{x}))\frac{\partial U^T}{\partial e}(e) \right\|^2 - \|z\|^2 + \|w\|^2 \\
&\leq \left\| u + \frac{1}{2}g_2^T(\tilde{x})\frac{\partial V^T}{\partial \tilde{x}}(\tilde{x}) + \frac{1}{2}(g_2^T(x) - g_2^T(\tilde{x}))\frac{\partial U^T}{\partial e}(e) \right\|^2 - \frac{1}{4}\left\| (g_2^T(x) - g_2^T(\tilde{x}))\frac{\partial U^T}{\partial e}(e) \right\|^2 + \\
&\quad - \left\| w - \frac{1}{2}g_1^T(\tilde{x})\frac{\partial V^T}{\partial \tilde{x}}(\tilde{x}) - \frac{1}{2}(g_1^T(x) - g_1^T(\tilde{x}))\frac{\partial U^T}{\partial e}(e) \right\|^2 - \|z\|^2 + \|w\|^2
\end{aligned}$$

If we take

$$u = -\frac{1}{2}g_2^T(\tilde{x})\frac{\partial V^T}{\partial \tilde{x}}(\tilde{x}) = F_0(\tilde{x}),$$

then

$$\dot{W}(e,\tilde{x}) \leq -\|z\|^2 + \|w\|^2$$

so

$$\int_0^T (\|w\|^2 - \|z\|^2)dt \geq W(e(T),\tilde{x}(T)) - W(0,0) = W(e(T),\tilde{x}(T)) \geq 0.$$

for all $T \geq 0$ and $(x,\tilde{x}) \in \mathcal{B}_r$.

Next, consider the asymptotic stability of the closed-loop system. It is sufficient to show if $(x(0),\tilde{x}(0)) \in \mathcal{B}_r$, then $(x(t),\tilde{x}(t)) \to 0$ or $(e(t),x(t)) \to 0$ as $t \to \infty$. Take

$$u = -\frac{1}{2}g_2^T(\tilde{x})\frac{\partial V^T}{\partial \tilde{x}}(\tilde{x}) \quad \text{and} \quad w = 0.$$

$V(\tilde{x})$ and $U(e)$ is positive definite by assumptions. Therefore $W(e,\tilde{x}) = U(e) + V(\tilde{x})$ is also positive definite, and it can be used as a Lyapunov function.

We already have

$$\dot{W}(e,\tilde{x}) \leq -\|z\|^2 + \|w\|^2 = -\|z\|^2 \leq 0$$

Now $\dot{W}(e,\tilde{x}) = 0 \Rightarrow z = 0 \quad \Rightarrow \quad x(t) \to 0$ as $t \to \infty$ by assumption [A4]. On the other hand, $\dot{U}(e) = T(U,e,\tilde{x})$ is negative definite for $(x,\tilde{x}) \in \mathcal{B}_r$ by previous lemma, then $e(t) \to 0$ as $t \to \infty$. By LaSalle's Theorem, the closed loop system is (locally) asymptotically stable.

Finally, the DF controller $u = \Omega(P_{DF}, K_{FI})y$ is recovered as

$$\begin{cases} \dot{\tilde{x}} = f(\tilde{x}) - \frac{1}{2}g_2(\tilde{x})g_2^T(\tilde{x})\frac{\partial V^T}{\partial \tilde{x}}(\tilde{x}) - g_1(\tilde{x})h_0(\tilde{x}) - g_1(\tilde{x})y \\ u = -\frac{1}{2}g_2^T(\tilde{x})\frac{\partial V^T}{\partial \tilde{x}}(\tilde{x}) \end{cases}$$

□

Next, we consider the $\mathcal{H}_\infty$-controller parameterization. Denote

$$\epsilon_u(x,\tilde{x}) := \frac{1}{2}(g_2^T(x) - g_2^T(\tilde{x}))\frac{\partial U^T}{\partial e}(e), \qquad \epsilon_w(x,\tilde{x}) := \frac{1}{2}(g_1^T(x) - g_1^T(\tilde{x}))\frac{\partial U^T}{\partial e}(e)$$

Define

$$u^* := -\frac{1}{2}g_2^T(\tilde{x})\frac{\partial V^T}{\partial \tilde{x}}(\tilde{x}) - \epsilon_u(x,\tilde{x})$$

$$w^* := \frac{1}{2}g_1^T(\tilde{x})\frac{\partial V^T}{\partial \tilde{x}}(\tilde{x}) + \epsilon_u(x,\tilde{x})$$

From the previous proof,

$$\dot{W}(e,\tilde{x}) \leq \|u - u^*\|^2 - \|w - w^*\|^2 - \|z\|^2 + \|w\|^2$$

If take

$$u = u^* + Q(w - w^*)$$

with $Q \in \mathcal{FG}$, let ξ be the state variable for Q. And U_Q is a solution to the HJI with respect to Q, then

$$\dot{U}_Q(\xi) \leq \|w - w^*\|^2 - \|u - u^*\|^2$$

then

$$\dot{W}(e, \tilde{x}) + \dot{U}_Q(\xi) \leq - \|z\|^2 + \|w\|^2$$

so

$$\int_0^T (\|w\|^2 - \|z\|^2)dt \geq W(e(T), \tilde{x}(T)) + U_Q(\xi(T)) \geq 0.$$

It seems that the controller recovered from $u = u^* + Q(w - w^*)$ solves the $\mathcal{H}_\infty$-control problem for DF. However, it can hardly be physically implemented, since (i) Q requires some extra high order terms $\epsilon_u(x, \tilde{x})$ and $\epsilon_w(x, \tilde{x})$ as parts of its input and output, but they can not be provided by the closed loop system; and (ii) the term $h_0(x) - h_0(\tilde{x})$, which is a part of the measured output, does not appear in the required input for Q. But, fortunately, the terms $\epsilon_u(x, \tilde{x})$ and $\epsilon_w(x, \tilde{x})$ can be eliminated by the assumption **[A6]**; and $h_0(x) - h_0(\tilde{x})$ is actually the measured noise introduced by the controller. It is reasonable to take $w_{DF} = w + h_0(x) - h_0(\tilde{x})$ as the total disturbance.

The DF $\mathcal{H}_\infty$-control problem can be modified as follows.

$\mathcal{H}_\infty$-Control Problem for DF: Find a class of controllers such that the closed loop system satisfies

$$\int_0^T (\|z\|^2 - \|w_{DF}\|^2)dt \leq 0.$$

for all $T \geq 0$, i.e., the controllers attenuate the external disturbance and the measured noise introduced by itself. It can be concluded that

Theorem 4.6 *Under the assumptions of previous Theorem, define*

$$F_0(\tilde{x}) := -\frac{1}{2} g_2^T(\tilde{x}) \frac{\partial V^T}{\partial \tilde{x}}(\tilde{x}), \qquad F_1(\tilde{x}) := \frac{1}{2} g_1^T(\tilde{x}) \frac{\partial V^T}{\partial \tilde{x}}(\tilde{x}).$$

The controller $u = \Omega(M_{FD}, Q)y$ with M_{DF} given by

$$\left\{ \begin{array}{lclcccl} \dot{\tilde{x}} & = & f(\tilde{x}) + g_2(\tilde{x})F_0(\tilde{x}) - g_1(\tilde{x})h_0(\tilde{x}) & + & g_1(\tilde{x})y & + & g_2(\tilde{x})u_0 \\ u & = & F_0(\tilde{x})) & & & & u_0 \\ y_0 & = & -h_0(\tilde{x}) - F_1(\tilde{x}) & + & y & & \end{array} \right.$$

for all $Q \in \mathcal{FG}$ also (locally) solves DF $\mathcal{H}_\infty$-control problem.

Proof Consider system $\Omega(G_{DF}, \Omega(M_{DF}, Q))$, assume ξ is the state of Q. Take $W(e, \tilde{x})$ the same as in previous them, the same arguments in previous proof yield that, for all $(x, \tilde{x}, \xi) \in \mathcal{B}_r$.

$$\dot{W}(e, \tilde{x}) \leq \left\| u + \frac{1}{2} g_2^T(\tilde{x}) \frac{\partial V^T}{\partial \tilde{x}}(\tilde{x}) \right\|^2 - \left\| w_{DF} - \frac{1}{2} g_1^T(\tilde{x}) \frac{\partial V^T}{\partial \tilde{x}}(\tilde{x}) \right\|^2 - \|z\|^2 + \|w_{DF}\|^2$$

Since $Q \in \mathcal{FG}$, then there is a positive definite $U_c(\xi)$ related to Q such that

$$\dot{U}_c(\xi) \leq - \left\| u + \frac{1}{2} g_2^T(\tilde{x}) \frac{\partial V^T}{\partial \tilde{x}}(\tilde{x}) \right\|^2 + \left\| w_{DF} - \frac{1}{2} g_1^T(\tilde{x}) \frac{\partial V^T}{\partial \tilde{x}}(\tilde{x}) \right\|^2$$

So

$$\dot{W}(e, \tilde{x}) + \dot{U}_c(\xi) \leq - \|z\|^2 + \|w_{DF}\|^2$$

It can be concluded that

$$\int_0^T (\|w_{DF}\|^2 - \|z\|^2) dt \geq 0, \forall T \in R^+.$$

Next, consider the stability of the closed loop system whose state is $(e, \tilde{x}, \xi)$, set $w = 0$, then it is of the form

$$\begin{cases} \dot{e} = \alpha(t, e) \\ \dot{\tilde{x}} = \beta(t, e, \tilde{x}, \xi) \\ \dot{\xi} = a(\xi) + b(\xi) y_0 \end{cases}$$

where $y_0|_{(e,\tilde{x})=0} = 0$. Notice that the subsystems with states e, $\tilde{x}$ and ξ are hierarchically interconnected. Assume the closed loop system evolves in $\mathcal{B}_r$. $e \to 0$ as $t \to \infty$ by the similar argument in the proof of previous Theorem. Consider the connected system with state $(\tilde{x}, \xi)$; $L_{DF}(\tilde{x}, \xi) := W(e, \tilde{x})|_{e=0} + U_c(\xi)$ is positive definite, and can be used as the Lyapunov function. Let $w = 0$. Since $e = \tilde{x} - x = 0$, $w_{DF} = 0$.

$$\dot{L}_{DF}(\tilde{x}, \xi) \leq - \|z\|^2 \leq 0$$

$\dot{L}_{DF}(\tilde{x}, \xi) = 0$ implies $z = 0$, so $\tilde{x}(t) = x(t) \to 0$ as $t \to \infty$. On the other hand, $\tilde{x} = 0 \to y_0 = 0$, this also implies $\xi(t) \to 0$ as $t \to \infty$. LaSalle's Theorem implies interconnected system with states $(\tilde{x}, \xi)$ is asymptotically stable. By the stability Theorem of hierarchical systems([38, 39]), The closed loop system is (locally) asymptotically stable. □

4.3 Full Control Problem

Consider the system

$$G_{FC}: \begin{cases} \dot{x} &= f(x) + g_1(x)w + \begin{bmatrix} I & 0 \\ 0 & I \end{bmatrix} u \\ z &= h_1(x) + \\ y &= h_2(x) + k_{21}(x)w \end{cases}$$

The assumptions for this structure are

[A3]: $\begin{bmatrix} g_1(x) \\ k_{21}(x) \end{bmatrix} k_{21}^T(x) = \begin{bmatrix} 0 \\ I \end{bmatrix}$;

[A5]: $[h_2(x), f(x)]$ is zero-state detectable..

The solvability of $\mathcal{H}_\infty$-control problem to FC is also related to the HJI:

$$\mathcal{H}_{FC}(U,x) := \frac{\partial U}{\partial x}(x)f(x) + \frac{1}{4}\frac{\partial U}{\partial x}(x)g_1(x)g_1^T(x)\frac{\partial U^T}{\partial x}(x) + h_1^T(x)h_1(x) - h_2^T(x)h_2(x) \leq 0,$$

A nice property for this HJI is that its solutions form a convex set (Corollary 2.4).

Theorem 4.7 *(i) If $U(x)$ with $U(0) = 0$ satisfies*

$$\mathcal{H}_{OI}(U, L_0, x) := \frac{\partial U}{\partial x}(x)(f(x) + L_0(x)h_2(x)) +$$

$$+\frac{1}{4}\frac{\partial U}{\partial x}(x)(g_1(x) + L_0(x)k_{21}(x))(g_1(x) + L_0(x)k_{21}(x))^T\frac{\partial U^T}{\partial x}(x) + h_1^T(x)h_1(x) \leq 0$$

for some $L_0(x)$, then $U(x)$ satisfies $\mathcal{H}_{FC}(U,x) \leq 0$ with $U(0) = 0$ as well.

Conversely, if $U(x)$ satisfies $\mathcal{H}_{FC}(U,x) \leq 0$ with $U(0) = 0$, and $L_0(x)$ is such that

$$\frac{\partial U}{\partial x}(x)L_0(x) = -2h_2^T(x),$$

Then $\mathcal{H}_{OI}(U, L_0, x) \leq 0$.

(ii) If system $[h_2(x), f(x)]$ is zero-state observable. Suppose $U(x) \geq 0$ solves $\mathcal{H}_{FC}(U,x) \leq 0$ with $U(0) = 0$. If

$$\frac{\partial U}{\partial x}(x)L_0(x) = -2h_2^T(x),$$

has a solution $L_0(x)$, then $U(x)$ is positive definite.

Proof (i) Notice that there exists $L_0(x)$ such that

$$\mathcal{H}_{OI}(U, L_0, x) \leq 0$$

only if

$$0 \geq \inf_{\frac{\partial U}{\partial x}(x)L_0(x)} \mathcal{H}_{OI}(U, L_0, x) = \mathcal{H}_{OI}(U, L_0, x)|_{\frac{\partial U}{\partial x}(x)L_0(x)=-2h_2^T(x)} = \mathcal{H}_{FC}(U, x)$$

And it is also sufficient if $\frac{\partial U}{\partial x}(x)L_0(x) = -2h_2^T(x)$ has a solution $L_0(x)$.

(ii) Will be proved during the proof of the following Theorem. □

Theorem 4.8 *Suppose $U(x)$ positive definite is such that $\mathcal{H}_{FC}(U, x) \leq 0$. If $L_0(x)$ satisfies*

$$\frac{\partial U}{\partial x}(x)L_0(x) = -2h_2^T(x),$$

then the controller given by "output injection"

$$u(x) = \begin{bmatrix} L_0(x) \\ 0 \end{bmatrix} y$$

solves the $\mathcal{H}_\infty$-control problem for FC.

Proof (i) $\mathcal{L}_2$**-gain** ≤ 1. Just $U(x) \geq 0$ is assumed.

$$\begin{aligned}
\dot{U}(x) &= \frac{\partial U}{\partial x}(x)(f(x) + g_1(x)w + \begin{bmatrix} I & 0 \end{bmatrix} u) \\
&\leq -\frac{1}{4}\frac{\partial U}{\partial x}(x)g_1(x)g_1^T(x)\frac{\partial U^T}{\partial x}(x) - h_1^T(x)h_1(x) + h_2^T(x)h_2(x) + \\
&\quad + \frac{\partial U}{\partial x}(x)g_1(x)w + \begin{bmatrix} \frac{\partial U}{\partial x}(x) & 0 \end{bmatrix} u \\
&= \left\| \begin{bmatrix} 0 & I \end{bmatrix} u \right\|^2 - \left\| w - g_1^T(x)\frac{\partial U^T}{\partial x}(x) + k_{21}^T(x)h_2(x) \right\|^2 - \|z\|^2 + \|w\|^2 + \\
&\quad + (\begin{bmatrix} \frac{\partial U}{\partial x}(x) & 2h_1^T(x) \end{bmatrix} u + 2h_2^T(x)(h_2(x) + k_{21}(x)w))
\end{aligned}$$

Note that $k_{21}(x)k_{21}^T(x) = I$ for all $x \in \mathbb{R}^n$ by assumption **[A3]**, so $\|k_{21}(x)v\| \leq \|v\|$ for all $v \in \mathbb{R}^{p_1}$.

Observe that $y = h_2(x) + k_{21}(x)w = k_{21}(x)(w - g_1^T(x)\frac{\partial U^T}{\partial x}(x) + k_{21}^T(x)h_2(x))$, then

$$\|y\|^2 = \|h_2(x) + k_{21}(x)w\|^2 \leq \left\| w - g_1^T(x)\frac{\partial U^T}{\partial x}(x) + k_{21}^T(x)h_2(x) \right\|^2$$

So

$$\dot{U}(x) \leq \left\| \begin{bmatrix} 0 & I \end{bmatrix} u \right\|^2 - \|y\|^2 - \|z\|^2 + \|w\|^2 + (\begin{bmatrix} \frac{\partial U}{\partial x}(x) & 2h_1^T(x) \end{bmatrix} u + 2h_2^T(x)y)$$

Note that

$$\dot{U}(x) \leq -\|y\|^2 - \|z\|^2 + \|w\|^2 \leq -\|z\|^2 + \|w\|^2$$

if u is such that $\begin{bmatrix} 0 & I \end{bmatrix} u = 0$ and $\begin{bmatrix} \frac{\partial U}{\partial x}(x) & 2h_1^T(x) \end{bmatrix} u + 2h_2^T(x)y = 0$, but it is guaranteed by taking the controller as the given "output injection":

$$u(x) = \begin{bmatrix} L_0(x) \\ 0 \end{bmatrix} y$$

where $L_0(x)$ solves

$$\frac{\partial U}{\partial x}(x)L_0(x) = -2h_2^T(x).$$

It follows that

$$\int_0^T (\|w\|^2 - \|z\|^2)dt \geq U(x(T)) - U(0) = U(x(T)) \geq 0$$

for all $T \geq 0$.

(ii) **Proof of Theorem 4.7(ii).** It is assumed $[h_2(x), f(x)]$ is observable in this proof. If the above controller is taken, then the closed loop system is

$$\begin{cases} \dot{x} = f(x) + L_0(x)h_2(x) + (g_1(x) + L_0(x)k_{21}(x))w \\ z = h_1(x) \\ y = h_2(x) + k_{21}(x)w \end{cases}$$

From the previous proof,

$$\dot{U}(x) \leq -\|y\|^2 - \|z\|^2 + \|w\|^2$$

Since $U(x) \geq 0$, the closed loop system is dissipative with respect to $\|w(t)\|^2 - \|z(t)\|^2 - \|y(t)\|^2$. For all $x \in \mathbb{R}^n$,

$$U(x) \geq \sup_{w \in \mathcal{L}_2[0,\infty), x(0)=x} -\int_0^\infty (\|w(t)\|^2 - \|z(t)\|^2 - \|y(t)\|^2)dt$$

$$\geq -\int_0^\infty (0 - \|z(t)\|^2 - \|y(t)\|^2)dt = \int_0^\infty (\|z(t)\|^2 + \|y(t)\|^2)dt$$

$U(x) = 0 \Longrightarrow y(t) = h_2(x(t)) = 0$ for $w(t) = 0$.

$$\begin{cases} \dot{x} = f(x) + L_0(x)h_2(x) \\ h_2(x) = 0 \end{cases} \Leftrightarrow \begin{cases} \dot{x} = f(x) \\ h_2(x) = 0 \end{cases}$$

By the observability assumption $x = 0$, $U(x)$ is (locally) positive definite.

(iii) **Asymptotic Stability**

$U(x)$ is positive definite by assumption, it can be used as a Lyapunov function.

Set $w = 0$,

$$\dot{U}(x) \leq \|w(t)\|^2 - \|z(t)\|^2 - \|h_2(x(t))\|^2 = -\|z(t)\|^2 - \|h_2(x(t))\|^2 \leq 0.$$

So $\dot{U}(x) = 0 \quad \Rightarrow \quad h_2(x(t)) = 0 \quad \Rightarrow \quad x(t) \to 0$ as $t \to \infty$ by assumption **[A5]**. LaSalle's Theorem implies $\dot{x} = f(x) + L_0(x)h_2(x)$ is asymptotically stable.

□

From the above proof,

$$\dot{U}(x) \leq \|u_2\|^2 - \|y\|^2 - \|z\|^2 + \|w\|^2 + (\frac{\partial U}{\partial x}(x)u_1 + 2h_1^T(x)u_2 + 2h_2^T(x)y)$$

Assume $L_1(x)$ is such that

$$\frac{\partial U}{\partial x}(x)L_1(x) = -2h_1^T(x),$$

Take $u_1 = L_0(x)y + L_1(x)u_2$, then

$$\frac{\partial U}{\partial x}(x)u_1 + 2h_1^T(x)u_2 + 2h_2^T(x)y = 0$$

Therefore

$$\dot{U}(x) \leq \|u_2\|^2 - \|y\|^2 - \|z\|^2 + \|w\|^2$$

Let $u_2 = Qy$ with $Q \in \mathcal{FG}$ (so $u_1 = L_0(x)y + L_2(x)Qy$ then), Q can be assumed to have the following realization

$$\begin{cases} \dot{\xi} = a(\xi) + b(\xi)y \\ u_2 = c(\xi) \end{cases}$$

Then there exists $U_c(\xi) \geq 0$ positive definite such that

$$\dot{U}_c(\xi) \leq \|y\|^2 - \|u_2\|^2$$

and $\dot{\xi} = a(\xi)$ is asymptotically stable.

Define $W(x, \xi) = U(x) + U_c(\xi)$ for $(x, \xi) \in \mathbb{R}^n \times \mathbb{R}^n$, then $W(x, \xi) \geq 0$ is positive definite.

$$\begin{aligned} \dot{W}(x, \xi) &= \dot{U}(x) + \dot{U}_c(\xi) \\ &\leq (\|u_2\|^2 - \|y\|^2 - \|z\|^2 + \|w\|^2) + (\|y\|^2 - \|u_2\|^2) \\ &= \|w\|^2 - \|z\|^2 \end{aligned}$$

So

$$\int_0^T (\|w\|^2 - \|z\|^2)dt \geq W(x(T), \xi(T)) - W(0, 0) = W(x(T), \xi(T)) \geq 0.$$

for all $T \geq 0$.

Thus, we motivated the characterization of a class of controllers.

Theorem 4.9 *The assumptions are the same as in the last Theorem. If in addition, U is such that $\mathcal{H}_{FC}(U,x)$ is negative definite, and $L_1(x)$ also satisfies:*

$$\frac{\partial U}{\partial x}(x)L_1(x) = -2h_1^T(x),$$

then

$$u = \begin{bmatrix} L_0(x) + L_1(x)Q \\ Q \end{bmatrix} y$$

for all $Q \in \mathcal{FG}$ also solves the $\mathcal{H}_\infty$-control problem for FC.

Proof We only need to consider the stability. Since $\mathcal{H}_{FC}(U,x)$ is negative definite, then there exist a positive definite $\pi(x)$, such that

$$\mathcal{H}_{FC}(U,x) + \pi(x) \leq 0$$

By corollary 2.3,

$$\dot{U}(x) \leq \|u_2\|^2 - \|y\|^2 - \|z\|^2 + \|w\|^2 - \pi(x)$$

$W(x,\xi) = U(x) + U_c(\xi)$ is positive definite, as $U(x)$ and $U_c(\xi)$ are. It can be taken as Lyapunov function, let $w = 0$, then

$$\dot{W}(x,\xi) \leq (\|u_2\|^2 - \|y\|^2 - \|z\|^2 - \pi(x)) + \|y\|^2 - \|u_2\|^2) = -\|z\|^2 - \pi(x) \leq 0$$

Note that $\dot{W}(x,\xi) = 0$ implies $\pi(x) = 0$, $x = 0$ by assumption. If $x = 0$ then $\dot{\xi} = a(\xi) + b(\xi)y = a(\xi)$ is asymptotically stable, so $\xi(t) \to 0$ as $t \to \infty$. LaSalle's Theorem implies the asymptotic stability. □

4.4 Output Estimation Problem

Consider

$$G_{OE} : \begin{cases} \dot{x} &= f(x) + g_1(x)w + g_0(x)u \\ z &= h_1(x) + u \\ y &= h_2(x) + k_{21}(x)w \end{cases}$$

The assumptions for this structure are

[A3]: $\begin{bmatrix} g_1(x) \\ k_{21}(x) \end{bmatrix} k_{21}^T(x) = \begin{bmatrix} 0 \\ I \end{bmatrix}$;

[A5]: $[h_2(x), f(x)]$ is (locally) zero-state detectable.

Theorem 4.10 *Consider G_{OE}, suppose there exists a positive definite solution $U(x)$ to HJI: $\mathcal{H}_{FC}(U,x) \leq 0$, with $U(0) = 0$; and $U(x)$ makes the Hessian matrix of $\mathcal{H}_{FC}(U,x)$ with respect to $x \in \mathbb{R}^n$ be negative definite at 0. If $L_0(x)$ satisfies*

$$\frac{\partial U}{\partial x}(x)L_0(x) = -2h_2^T(x),$$

then there exists a controller such that the closed loop system locally has $\mathcal{L}_2$-gain ≤ 1. And such a controller can be given by

$$K_{OE} : \begin{cases} \dot{\tilde{x}} &= f(\tilde{x}) - g_0(\tilde{x})h_1(\tilde{x}) + L_0(\tilde{x})h_2(\tilde{x}) \quad - \quad L_0(\tilde{x})y \\ u &= -h_1(\tilde{x}) \end{cases}$$

Furthermore, the closed loop system is also (locally) asymptotically stable at 0, if in addition,

[A7]: *$\dot{x} = f(x) - g_0(x)h_1(x)$ is (locally) asymptotically stable,*

Remark 4.2 Another controller which results in the closed loop system locally having $\mathcal{L}_2$-gain ≤ 1 is

$$\begin{cases} \dot{\hat{x}} &= f(\hat{x}) - g_0(\hat{x})h_1(\hat{x}) + L_0(\hat{x})h_2(\hat{x}) \quad + \quad L_0(\hat{x})y \\ u &= h_1(\hat{x}) \end{cases}$$

But the asymptotic stability can only be insured by that $\dot{x} = f(x) - g_0(x)h_1(x)$ is exponentially stable.

Lemma 4.11 *Suppose the positive definite $U(x) \geq 0$ is such that $\mathcal{H}_{FC}(U,x)$ is negative definite. Let $x, \tilde{x}$ be states of systems G_{OE} and K_{OE}, $e = \tilde{x} - x$. Define*

$$\begin{aligned} \mathcal{H}_e(e,\tilde{x}) := \frac{\partial U}{\partial e}(e)(f(\tilde{x}) - f(x) + L_0(\tilde{x})(h_2(\tilde{x}) - h_2(x)))+ \\ +\frac{1}{4}\frac{\partial U}{\partial e}(e)(g_1(x) + L_0(\tilde{x})k_{12}(x))(g_1(x) + L_0(\tilde{x})k_{12}(x))^T\frac{\partial U^T}{\partial e}(e)+ \\ +(h_1^T(\tilde{x}) - h_1^T(x))(h_1(\tilde{x}) - h_1(x)) - \frac{\partial U}{\partial e}(e)(g_0(x) - g_0(\tilde{x}))h_1(\tilde{x}) \end{aligned}$$

with $L_0(\tilde{x})$ defined as in previous Theorem. Then for all $(x,\tilde{x}) \in \mathcal{B}_r$ with some $r > 0$, $\mathcal{H}_e(e,\tilde{x}) \leq 0$. Moreover, there exists $\pi(e)$ (locally) positive definite such that $\mathcal{H}_e(e,\tilde{x}) + \pi(e) \leq 0$.

Proof Recall that $\mathcal{H}_{OI}(U, L_0, e) = \mathcal{H}_{FC}(U, e)$, where

$$\mathcal{H}_{OI}(U, L_0, e) := \frac{\partial U}{\partial e}(e)(f(e) + L_0(e)h_2(e)) +$$

$$+\frac{1}{4}\frac{\partial U}{\partial e}(e)(g_1(e) + L_0(e)k_{21}(e))(g_1(e) + L_0(e)k_{21}(e))^T \frac{\partial U^T}{\partial e}(e) + h_1^T(e)h_1(e)$$

Also note that the Hessian matrix of $\mathcal{H}_e(e, \tilde{x})$ with respect to e at 0 is the same as the one of $\mathcal{H}_{OI}(U, L_0, e) = \mathcal{H}_{FC}(U, e)$ with respect to e at 0. □

Remark 4.3 If we take $u = \begin{bmatrix} L_0(\tilde{x}) \\ 0 \end{bmatrix} y$ with $y_0 = h_2(\tilde{x}) - h_2(x) - k_{12}(x)w$, let $z = h_1(x) - h_1(\tilde{x}) + \begin{bmatrix} 0 & I \end{bmatrix} u$, then

$$\dot{U}(e) = \frac{\partial U}{\partial e}(e)(f(\tilde{x}) - f(x)) + g_1(x)w + \begin{bmatrix} I & 0 \end{bmatrix} u)$$

$$\leq -\|y_0\|^2 + \|w\|^2 - \|z\|^2 - \frac{\partial U}{\partial e}(e)(g_0(x) - g_0(\tilde{x}))h_1(\tilde{x})$$

for all $(x, \tilde{x}) \in \mathcal{B}_r$.

Proof of Theorem 4.10 Consider $\Omega(G_{OE}, K_{FC})$ which has following realization

$$\begin{cases} \dot{x} &= f(x) - g_0(x)h_1(\tilde{x}) & + & g_1(x)w \\ \dot{\tilde{x}} &= (f(\tilde{x}) - g_0(\tilde{x})h_1(\tilde{x})) + L_0(\tilde{x})(h_2(\tilde{x}) - h_2(x)) & - & L_0(\tilde{x})k_{21}(x)w \\ z &= h_1(x) - h_1(\tilde{x}) \end{cases}$$

Let $e = \tilde{x} - x$, for $(x, \tilde{x}) \in \mathcal{B}_r$.

$$\dot{U}(e) = \frac{\partial U}{\partial e}(e)((f(\tilde{x}) - f(x) + L_0(\tilde{x})(h_2(\tilde{x}) - h_2(x)) +$$

$$-(L_0(\tilde{x})k_{21}(x) + (g_1(x))w) - \frac{\partial U}{\partial e}(e)(g_0(\tilde{x}) - g_0(x))h_1(\tilde{x})$$

$$\leq \|w\|^2 - \|z\|^2 - \|y_0\|^2 \leq -\|z\|^2 + \|w\|^2$$

so

$$\int_0^T (\|w\|^2 - \|z\|^2)dt \geq U(e(T)) - U(0) = U(e(T)) \geq 0.$$

for all $T \geq 0$.

Next, the asymptotic stability of the closed loop system is considered. It has the realization as follows.

$$\begin{cases} \dot{\tilde{x}} = f(\tilde{x}) - g_0(\tilde{x})h_1(\tilde{x}) + L_0(\tilde{x})(h_2(\tilde{x}) - h_2(x)) \\ \dot{e} = \eta(t, e) \end{cases}$$

Since $\dot{U}(e)$ is positive definite from the negative definiteness of (Hessian matrix of) $\mathcal{H}_{FC}(U, e)$. Therefore $e(t) \to 0$ as $t \to \infty$. Note also that $\dot{\tilde{x}} = f(\tilde{x}) - g_0(\tilde{x})h_1(\tilde{x})$ is asymptotically stable. Since the two systems are hierarchically interconnected, and asymptotically stable, the interconnected system is asymptotically stable(cf. [38]). □

Theorem 4.12 *Under the assumption of the previous Theorem, if in addition, $L_1(x)$ is such that*

$$\frac{\partial U}{\partial x}(x)L_1(x) = -2h_1^T(x),$$

then the controller $u = \Omega(M_{OE}, Q)y$ with M_{OE} given by

$$\begin{cases} \dot{\tilde{x}} &= f(\tilde{x}) - g_0(\tilde{x})h_1(\tilde{x}) + L_0(\tilde{x})h_2(\tilde{x}) &- & L_0(\tilde{x})y &+ & (g_2(\tilde{x}) + L_1(\tilde{x}))u_2 \\ u &= -h_1(\tilde{x}) & + & & & u_2 \\ y_0 &= h_2(\tilde{x}) & - & y & & \end{cases}$$

for all $Q \in \mathcal{FG}$ also (locally) solves $\mathcal{H}_\infty$-control problem for OE.

Proof Consider $\Omega(G_{OE}, \Omega(M_{OE}, Q))$ for $Q \in \mathcal{FG}$ which has following realization.

$$\begin{cases} \dot{\xi} = a(\xi) + b(\xi)y \\ u_2 = c(\xi) \end{cases}$$

The similar argument shows that there exists $r > 0$, for $(x, \hat{x}, \xi) \in \mathcal{B}_r$,

$$\dot{U}(e) \leq \|w\|^2 - \|z\|^2 - \|y_0\|^2 + \|u_2\|^2 - \pi(e)$$

for some locally positive definite $\pi(e)$.

And U_Q is a solution to the HJI with respect to Q with state ξ, then

$$\dot{U}_Q(\xi) \leq \|y_0\|^2 - \|u_2\|^2$$

So

$$\dot{W}(e, \tilde{x}) + \dot{U}_Q(\xi) \leq -\|z\|^2 + \|w\|^2 - \pi(e) \leq -\|z\|^2 + \|w\|^2$$

Therefore,

$$\int_0^T (\|z\|^2 - \|w\|^2)dt \leq W(0,0) - W(e(T), \tilde{x}(T)) = -W(e(T), \tilde{x}(T)) \leq 0.$$

As for the stability, take $w = 0$ then the closed loop system has following hierarchical structure.

$$\begin{cases} \dot{e} = \eta(t, e) \\ \dot{\xi} = a(\xi) + b(\xi)(h_2(\tilde{x}) - h_2(x)) \\ \dot{\tilde{x}} = f(\tilde{x}) - g_0(\tilde{x})h_1(\tilde{x}) + L_0(\tilde{x})(h_2(\tilde{x}) - h_2(x)) + (g_2(\tilde{x}) + L_1(\tilde{x}))c(\xi) \end{cases}$$

Take $L_{OE}(e, \xi) = W(e, \tilde{x}) + U_Q(\xi)$ as the Lyapunove function of the interconnected system with state (e, ξ), then $\dot{L}_{OE}(e, \xi) \leq -\|z\|^2 - \pi(e)$. Now $\dot{L}_{OE}(e, \xi) = 0 \Rightarrow \pi(e) = 0$, so $e = 0$. So in this case $\dot{\xi} = a(\xi)$; but it is asymptotically stable, so $\xi(t) \to 0$ as $t \to \infty$. The interconnected (e, ξ) is locally asymptotically stable by LaSalle's Theorem. Now if $(e, \xi) = 0$ then $\dot{\tilde{x}} = f(\tilde{x}) - g_0(\tilde{x})h_1(\tilde{x})$; but it is locally asymptotically stable at 0 by assumption **[A7]**. Thus, we can conclude that this closed loop system is asymptotically stable by the stability Theorem for hierarchical systems([38]). □

5 $\mathcal{H}_\infty$-Control: Output Feedback Problems and Separation Principle

We now consider the general output feedback $\mathcal{H}_\infty$ control problem. The solutions to this problem are based on the reults in the last section.

5.1 Solutions to Output Feedback Problems

The nonlinear time-invariant plant is realized as affine state-space equation:

$$G : \begin{cases} \dot{x} = f(x) + g_1(x)w + g_2(x)u \\ z = h_1(x) + k_{12}(x)u \\ y = h_2(x) + k_{21}(x)w \end{cases}$$

where $f(0) = 0, h_1(0) = 0, h_2(0) = 0$; x, w, u, z, and y are assumed to have dimensions n, p_1, p_2, q_1, and q_2, respectively.

The following assumptions are made:

[A2]: $k_{12}^T(x) \begin{bmatrix} h_1(x) & k_{12}(x) \end{bmatrix} = \begin{bmatrix} 0 & I \end{bmatrix}$;

[A3]: $\begin{bmatrix} g_1(x) \\ k_{21}(x) \end{bmatrix} k_{21}^T(x) = \begin{bmatrix} 0 \\ I \end{bmatrix}$;

[A4]: $[h_1(x), f(x)]$ is zero-state detectable;

[A5]: $[h_2(x), f(x)]$ is zero-state detectable.

The solution to this problem is related to the following two HJIs

$$\mathcal{H}_{FI}(V, x) := \frac{\partial V}{\partial x}(x)f(x) + \frac{1}{4}\frac{\partial V}{\partial x}(x)(g_1(x)g_1^T(x) - g_2(x)g_2^T(x))\frac{\partial V^T}{\partial x}(x) + h_1^T(x)h_1(x) \leq 0,$$

and

$$\mathcal{H}_{FC}(U,x) := \frac{\partial U}{\partial x}(x)f(x) + \frac{1}{4}\frac{\partial U}{\partial x}(x)g_1(x)g_1^T(x)\frac{\partial U^T}{\partial x}(x) + h_1^T(x)h_1(x) - h_2^T(x)h_2(x) \leq 0,$$

Theorem 5.1 *Consider G, if there is some $\psi(x) \geq 0$ with $\psi(0) = 0$ such that*

(i) there exists a positive definite $V(x)$ which solves the HJE: $\mathcal{H}_{FI}(V,x) + \psi(x) = 0$ with $V(0) = 0$.

(ii) there exists a positive definite $U(x)$ which satisfies the HJI: $\mathcal{H}_{FC}(U,x) + \psi(x) \leq 0$ with $U(0) = 0$. And $\mathcal{H}_{FC}(U,x) + \psi(x)$ has nonsingular Hessian matrix at 0.

(iii) $U(x) - V(x) \geq 0$ is positive definite. And

$$(\frac{\partial U}{\partial x}(x) - \frac{\partial V}{\partial x}(x))L_0(x) = -2h_2^T(x),$$

has a solution $L_0(x)$.

Then the $\mathcal{H}_\infty$-control problem is (locally) solvable.

Define

$$F_0(x) := -\frac{1}{2}g_2^T(x)\frac{\partial V^T}{\partial x}(x), \qquad F_1(x) := \frac{1}{2}g_1^T(x)\frac{\partial V^T}{\partial x}(x).$$

The controller

$$K : \begin{cases} \dot{\hat{x}} = f(\hat{x}) + g_1(\hat{x})F_1(\hat{x}) + g_2(\hat{x})F_0(\hat{x}) + L_0(\hat{x})h_2(\hat{x}) - L_0(\hat{x})y \\ u = F_0(\hat{x}) \end{cases}$$

(locally) solves the $\mathcal{H}_\infty$-control problem.

Theorem 5.2 *Consider a system G satisfying the condition in Theorem 5.1. If in addition $L_1(x)$ satisfies*

$$(\frac{\partial U}{\partial x}(x) - \frac{\partial V}{\partial x}(x))L_1(x) = -2h_1^T(x),$$

then the controller $u = \Omega(M,Q)y$ with M given by

$$\begin{cases} \dot{\hat{x}} &= f(\hat{x}) + g_2(\hat{x})F_0(\hat{x}) + g_1(\hat{x})F_1(x) + L_0(\hat{x})h_2(\hat{x}) &- L_0(\hat{x})y &+ (g_2(\hat{x}) + L_1(\hat{x}))u_0 \\ u &= F_0(\hat{x}) &+ & u_0 \\ y_0 &= h_2(\hat{x}) &- y & \end{cases}$$

for all $Q \in \mathcal{FG}$ also (locally) solves $\mathcal{H}_\infty$-control problem for OE.

The main idea of construction is to convert the general problem OF into the simpler problems which have been solved if possible.

Let $V(x) \geq 0$ be the solution for $\mathcal{H}_{FI}(V,x) = 0$. Define new variables r and v by

$$r := w - \frac{1}{2}g_1^T(x)\frac{\partial V^T}{\partial x}(x)$$

$$v := u + \frac{1}{2} g_2^T(x) \frac{\partial V^T}{\partial x}(x)$$

now we get a new system

$$G_t : \begin{cases} \dot{x} &= f_t(x) + g_1(x)r + g_2(x)u \\ v &= h_t(x) + u \\ y &= h_2(x) + k_{21}(x)r \end{cases}$$

where

$$f_t(x) = f(x) + \frac{1}{2} g_1^T(x) g_1^T(x) \frac{\partial V^T}{\partial x}(x)$$

$$h_t(x) := -\frac{1}{2} g_2^T(x) \frac{\partial V^T}{\partial x}(x)$$

We have the following lemma.

Lemma 5.3 *Consider systems G and G_t. If the controller K makes $\Omega(G_t, K)$ have $\mathcal{L}_2$-gain ≤ 1, it also results in $\Omega(G, K)$ having $\mathcal{L}_2$-gain ≤ 1.*

Proof Note that $z = \Omega(G, K)w$ and $r = \Omega(G_t, K)v$.

Since $V(x) \geq 0$ solves $\mathcal{H}_{FI}(V, x) + \psi(x) = 0$, then

$$\begin{aligned} \dot{V}(x) &= \frac{\partial V}{\partial x}(x)(f(x) + g_1(x)w + g_2(x)u) \\ &= -\|z\|^2 + \|w\|^2 - \left\| w - \frac{1}{2} g_1^T(x) \frac{\partial V^T}{\partial x}(x) \right\|^2 + \left\| u + \frac{1}{2} g_2^T(x) \frac{\partial V^T}{\partial x}(x) \right\|^2 - \psi(x) \\ &\leq -\|z\|^2 + \|w\|^2 - \|v\|^2 + \|r\|^2 \end{aligned}$$

So for all $T \geq 0$,

$$\int_0^T (\|w\|^2 - \|z\|^2) dt \geq \int_0^T (\|v\|^2 - \|r\|^2) dt + V(x(T)) \geq \int_0^T (\|v\|^2 - \|r\|^2) dt.$$

$$\int_0^T (\|v\|^2 - \|r\|^2) dt \geq 0 \quad \Rightarrow \quad \int_0^T (\|w\|^2 - \|z\|^2) dt \geq 0.$$

□

Note that system G_t is of OE structure and satisfies the structure assumption **[A3]**. Define

$$\mathcal{H}_t(W, x) := \frac{\partial W}{\partial x}(x) f_t(x) + \frac{1}{4} \frac{\partial W}{\partial x}(x) g_1(x) g_1^T(x) \frac{\partial W^T}{\partial x}(x) + h_t^T(x) h_t(x) - h_2^T(x) h_2(x)$$

$$W(0) = 0.$$

Take $W(x) = U(x) - V(x)$ with $W(0) = U(0) - V(0)$ where $V(x) \geq 0$ is given just now. Note that

$$\mathcal{H}_t(W, x) = \mathcal{H}_{FC}(U, x) - \mathcal{H}_{FI}(V, x) = \mathcal{H}_{FC}(U, x) + \psi(x).$$

Thus, $\mathcal{H}_t(W, x) \leq 0$ if and only if $\mathcal{H}_{FC}(U, x) + \psi(x) \leq 0$. Assume $U(x)$ satisfies assumption (2) and (3), then $\mathcal{H}_t(W, x)$ also has negative definite Hessian matrix at 0.

We continue the proof of Theorem 5.1.

Proof of Theorem 5.1. Since $L_0(x)$ is such that

$$\frac{\partial W}{\partial x}(x) L_0(x) = -2h_2^T(x)$$

The controller K given by Theorem 4.10 as

$$K : \begin{cases} \dot{\hat{x}} = f_t(\hat{x}) + g_2(\hat{x})h_t(\hat{x}) + L_0(\hat{x})h_2(\hat{x}) - L(\hat{x})y \\ u = h_t(\hat{x}) \end{cases}$$

is such that system $\Omega(G_t, K)$ locally has $\mathcal{L}_2$-gain ≤ 1.

And by lemma 5.3, K is also such that $\Omega(G, K)$ has $\mathcal{L}_2$-gain ≤ 1. Note that K is exactly the one as given if substituting $f_t(\hat{x})$ and $h_t(\hat{x})$. We only need to verify the stability.

The closed loop system $\Omega(G, K)$ is

$$\begin{cases} \dot{x} &= f(x) + g_2(x)F_0(\hat{x}) & + & g_1(x)w \\ \dot{\hat{x}} &= f(\hat{x}) + g_1(\hat{x})F_1(\hat{x}) + g_2(\hat{x})F_0(\hat{x}) + L_0(\hat{x})(h_2(\hat{x}) - h_2(x)) & + & L_0(\hat{x})k_{21}(x)w \\ z &= h_1(x) + k_{12}(x)F_0(\hat{x}) \end{cases}$$

Take $e = \hat{x} - x$. Note that $\mathcal{H}_t(W, \cdot)$ has negative definite Hessian matrix as does $\mathcal{H}_{FC}(U, \cdot)$. Using the same technique as in the proof of Theorem 4.8, it can be concluded that for some locally positive definite $\pi : \mathbb{R}^n \to \mathbb{R}^+$, such that if $(x, \hat{x}) \in \mathcal{B}_s$ for some $s > 0$

$$\dot{W}(e) \leq \|r\|^2 - \|v\|^2 - \pi(e)$$

Let $L(x, e) = V(x) + W(e)$ with $e = \hat{x} - x$. By assumption $V(x)$ and $W(e)$ are positive definite, so is $L(x, e)$, and it can be used as a Lyapunov function. Take $w = 0$,

$$\dot{V}(x) \leq -\|z\|^2 + \|v\|^2 - \|r\|^2$$

$$\begin{aligned} \dot{L}(x, e) &= \dot{V}(x) + \dot{W}(e) \\ &\leq (-\|z\|^2 + \|v\|^2 - \|r\|^2) + (\|r\|^2 - \|v\|^2 - \pi(e)) = -\|z\|^2 - \pi(e) \leq 0. \end{aligned}$$

Then $\dot{L}(x, e) = 0 \Rightarrow z = 0$ and $\pi(e) = 0 \Rightarrow x = 0$ and $e = 0$. Therefore, $\dot{L}(x, e)$ is locally negative definite, the closed loop system is locally asymptotically stable. □

Similar arguments to Theorems 4.12 and 5.1 can be also used to prove Theorem 5.2.

Remark 5.1 In the previous Theorems, the two HJIs are decoupled. Thus, to check the conditions just needs to solve the two parallel HJIs and then check if their solutions satisfy condition (3).

Remark 5.2 In the last Theorem, the parameterized controllers are nonlinear fractional transformation on free parameter $Q \in \mathcal{FG}$. In fact, this stable, contractive nonlinear parameter Q can be more general, say, we can assume it has the following realization

$$Q : \begin{cases} \dot{\xi} = a(\xi, y_0) \\ u_0 = c(\xi, y_0) \end{cases}$$

And $\dot{\xi} = a(\xi, 0)$ is locally asymptotically stable at 0, and there exists $U_Q(\xi)$ positive definite and smooth such that $\dot{U}_Q(\xi) \leq \|y_0\|^2 - \|u_0\|^2$.

Remark 5.3 Note that the sufficient conditions in Theorem 5.1 are equivalent to the ones given by Isidori [22], although the approaches are basically different. In [25, 22], they assumed the controller had separation structure, and gave it an observer form, and then justified it by assuming the closed loop system corresponds a HJI which can guarantee it has $\mathcal{L}_2$-gain ≤ 1; and then simplified the conditions (see [22]). In this sense, this approach is synthesis. In this paper, we used the analysis approach. One of the advantages of the latter approach is that it can provide a class of parameterized $\mathcal{H}_\infty$-controllers.

Remark 5.4 $\mathcal{H}_\infty$-controllers have separation structures. The separation principle for the $\mathcal{H}_\infty$-performance in nonlinear systems was first confirmed by Ball-Helton-Walker[4, 5] (see also Isidori [22]).

5.2 Examples

In this subsection, we will examine an example whose solution can be verified in another way.

The basic block diagram is as follows

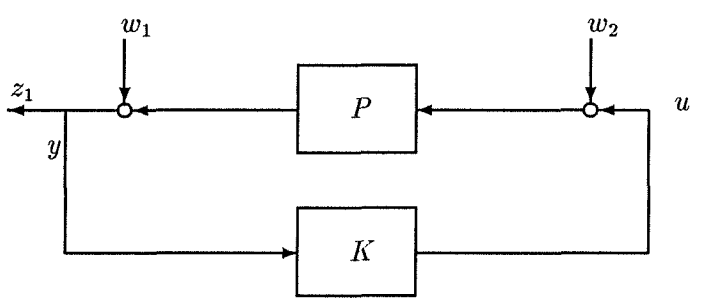

Where P is the nonlinear plant; K is the controller to be designed such that the output z_1 is regulated; y is the measured output, based on which the control action u is produced; w_2 is the disturbance from the actuator; and w_1 is the noise from the sensor. The **control**

problem is to design the controller K such that the influence of the noises w_1 and w_2 on the regulated output z_1 can be reduced to the minimal with the reasonable effort (control action should not be too large).

To formulate this problem, all the signals are considered in space $\mathcal{L}_2[0,\infty)$. Let $r \geq 0$, define

$$\gamma^*(r) = \inf\{\gamma : \int_0^T (\|z_1\|^2 + r\|u\|^2)dt \leq \gamma^2 \int_0^T (\|w_1\|^2 + \|w_2\|^2)dt, \forall T \in \mathbb{R}^+, for some K\}$$

The $\mathcal{H}_\infty$-control problem in this setting can be formulated as: Give $\gamma \geq \gamma^*(r)$, find K such that

$$\int_0^T (\|z_1\|^2 + r\|u\|^2)dt \leq \gamma^2 \int_0^T (\|w_1\|^2 + \|w_2\|^2)dt, \forall T \in \mathbb{R}^+$$

In this example, the plant has the following realization:

$$\begin{cases} \dot{x} = e^x(w_2 + u) \\ z_1 = x + w_1 \\ y = x + w_1 \end{cases}$$

We will consider two cases. In both cases, since the stability of the resulting closed loop systems can be easily checked by using the corresponding Theorems, we just consider the $\mathcal{H}_\infty$-performances.

Case I: $r = 0$

Consider the control problem that a controller K is designed such that:

$$\int_0^T \|z_1\|^2 dt \leq \gamma_0^2 \int_0^T (\|w_1\|^2 + \|w_2\|^2)dt, \forall T \in \mathbb{R}^+$$

where $\gamma_0 = 1/(1-\epsilon)$ for some $0 < \epsilon < 1$.

To standardize the problem, take

$$w := \begin{bmatrix} w_1 \\ w_2 \end{bmatrix} \qquad z := (1-\epsilon)z_1$$

Thus, the state-space realization is:

$$\begin{cases} \dot{x} &= & & \begin{bmatrix} 0 & e^x \end{bmatrix} w & + & e^x u \\ z &= & (1-\epsilon)x & + \begin{bmatrix} 1-\epsilon & 0 \end{bmatrix} w & & \\ y &= & x & + \begin{bmatrix} 1 & 0 \end{bmatrix} w & & \end{cases}$$

Change the variable $u' = e^x u$. Now it looks like the output-injection control problem. But it is not standard, since we need to get ride of the term $\begin{bmatrix} 1-\epsilon & 0 \end{bmatrix} w$ in the regulated

output z. By the simplification procedure we assumed in the proof of Theorem 3.1. we can get the simplified system:

$$\begin{cases} \dot{x} &= & \begin{bmatrix} 0 & e^x \end{bmatrix} w + u' \\ z &= \frac{1-\epsilon}{\sqrt{2\epsilon-\epsilon^2}} x & \\ y_N &= \frac{1}{\sqrt{2\epsilon-\epsilon^2}} x + & \begin{bmatrix} 1 & 0 \end{bmatrix} w \end{cases}$$

with $y_N = \sqrt{2\epsilon - \epsilon^2} y$. Now the system has a required output-injection structure.

Consider the HJI with respect to this structure:

$$\mathcal{H}_{FC}(U,x) = \frac{\partial U}{\partial x}(x) \cdot 0 + \frac{1}{4} e^{2x} (\frac{\partial U}{\partial x}(x))^2 + (\frac{1-\epsilon}{\sqrt{2\epsilon-\epsilon^2}} x)^2 - (\frac{1}{\sqrt{2\epsilon-\epsilon^2}} x)^2 \leq 0$$

A class of positive solutions $U(x)$ are such that

$$\frac{\partial U}{\partial x}(x) = 2\rho e^{-x} x$$

for $0 \leq \rho \leq 1$. Take $\rho = 1$, the solution $L(x)$ to

$$\frac{\partial U}{\partial x}(x) L(x) = \frac{2x}{\sqrt{2\epsilon - \epsilon^2}}$$

is

$$L(x) = -\frac{e^x}{\sqrt{2\epsilon - \epsilon^2}}$$

It follows that the controller is

$$u' = L(x) y_N = -\frac{e^x}{\sqrt{2\epsilon - \epsilon^2}} \cdot \sqrt{2\epsilon - \epsilon^2} y = -e^x y$$

or the output-injection can be recovered as $u = -y$. Note that it is independent of ϵ.

This $\mathcal{H}_\infty$ controller is identity ($K = -1$). Actually, we have following general result.

Theorem 5.4 (Doyle *et al.* [10]) *Consider the feedback system as shown. Suppose the plant P is passive, i.e.*

$$\int_0^T (Pe)^T e dt \geq 0, \qquad \forall T \in \mathbb{R}^+$$

and $K = -1$, then

$$\int_0^T \|z_1\|^2 dt \leq \int_0^T (\|w_1\|^2 + \|w_2\|^2) dt, \forall T \in R^+$$

Case II: $r = 1$

Consider the control problem that a controller K is designed such that:

$$\int_0^T (\|z_1\|^2 + \|u\|)dt \leq \gamma_0^2 \int_0^T (\|w_1\|^2 + \|w_2\|^2)dt, \forall T \in \mathbb{R}^+$$

where $\gamma_0 = \sqrt{2}/(1-\epsilon)$ for some $0 < \epsilon < 1$.

Take

$$w := \begin{bmatrix} w_1 \\ w_2 \end{bmatrix} \qquad z := \frac{1-\epsilon}{\sqrt{2}} \begin{bmatrix} z_1 \\ u \end{bmatrix}$$

Thus, the state-space realization is:

$$\begin{cases} \dot{x} = & & \begin{bmatrix} 0 & e^x \end{bmatrix} w + & e^x u \\ z = & \begin{bmatrix} \frac{1-\epsilon}{\sqrt{2}} x \\ 0 \end{bmatrix} + & \begin{bmatrix} \frac{1-\epsilon}{\sqrt{2}} & 0 \\ 0 & 0 \end{bmatrix} w + & \begin{bmatrix} 0 \\ \frac{1-\epsilon}{\sqrt{2}} \end{bmatrix} u \\ y = & x + & \begin{bmatrix} 1 & 0 \end{bmatrix} w & \end{cases}$$

To standardize this structure, by the procedure we assumed in the proof of Theorem 3.1, we can get the simplified system:

$$\begin{cases} \dot{x} = & & \begin{bmatrix} 0 & e^x \end{bmatrix} w + & \frac{\sqrt{2}}{1-\epsilon} e^x u_N \\ z = & \begin{bmatrix} \frac{1-\epsilon}{\sqrt{1+2\epsilon-\epsilon^2}} x \\ 0 \end{bmatrix} + & & \begin{bmatrix} 0 \\ 1 \end{bmatrix} u_N \\ y_N = & \sqrt{\frac{2}{1+2\epsilon-\epsilon^2}} x + & \begin{bmatrix} 1 & 0 \end{bmatrix} w & \end{cases}$$

with $u_N = \frac{1-\epsilon}{\sqrt{2}} u$ and $y_N = \sqrt{\frac{1+2\epsilon-\epsilon^2}{2}} y$. Now the system has a required output feedback structure.

Now take $\psi(x) = 0$ as in Theorem 5.1. Consider HJE:

$$\mathcal{H}_{FI}(V, x) = \frac{\partial V}{\partial x}(x) \cdot 0 + \frac{1}{4}(e^{2x} - \frac{2e^{2x}}{(1-\epsilon)^2})(\frac{\partial V}{\partial x}(x))^2 + (\frac{1-\epsilon}{\sqrt{1+2\epsilon-\epsilon^2}} x)^2 = 0.$$

The positive solution $V(x)$ is such that

$$\frac{\partial V}{\partial x}(x) = \frac{2(1-\epsilon)^2}{1+2\epsilon-\epsilon^2} e^{-x} x$$

Also consider HJI:

$$\mathcal{H}_{FC}(U, x) = \frac{\partial U}{\partial x}(x) \cdot 0 + \frac{1}{4} e^{2x} (\frac{\partial U}{\partial x}(x))^2 + (\frac{1-\epsilon}{\sqrt{1+2\epsilon-\epsilon^2}} x)^2 - (\sqrt{\frac{2}{1+2\epsilon-\epsilon^2}} x)^2 \leq 0$$

A class of positive definite solutions $U(x)$ are such that

$$\frac{\partial U}{\partial x}(x) = 2\rho e^{-x} x$$

for $0 \leq \rho < 1$. They make $\mathcal{H}_{FC}(U, x)$ have negative Hessian matrix at 0.

Now it can be easily checked that $U(x) - V(x)$ is positive definite if ρ is taken to be close enough to 1. And $L_0(x)$ can be solved by:

$$(\frac{\partial U}{\partial x}(x) - \frac{\partial V}{\partial x}(x))L_0(x) = -2\sqrt{\frac{2}{1 + 2\epsilon - \epsilon^2}}x$$

Then the controller can be constructed by Theorem 5.1.

Acknowledgements

The authors would like to thank Prof. R. Murray at Caltech for extensive discussion during this work. They also gratefully acknowledge helpful discussion with Prof. K. Astrom (Lund Inst Tech), Prof. M. Dahleh (MIT), M. Newlin (Caltech) and P. Young (Caltech). Support for this work was provided by NSF, AFOSR, and ONR.

References

[1] Anderson, B.D.O and J.B.Moore (1990), *Optimal Control: Linear Quadratic Methods*, Englewood Cliffs, NJ: Prentice Hall.

[2] Ball, J.A. and J.W. Helton (1988), "Factorization of Nonlinear Systems: Towards a Theory for Nonlinear $\mathcal{H}_\infty$ Control", *Proc. 27th IEEE CDC*, Austin, TX, pp.2376–2381.

[3] Ball, J.A. and J.W.Helton (1989), "$\mathcal{H}_\infty$ Control for Nonlinear Plants: Connections with Differential Games", *Proc. 28th IEEE CDC*, Tampa, FL., pp.956–962.

[4] Ball, J.A., J.W.Helton and M.L.Walker (1991), "$\mathcal{H}_\infty$ Control for Nonlinear Systems with Output Feedback", Submitted to *IEEE Trans. AC.*

[5] Ball, J.A., J.W.Helton and M.L.Walker (1992), "Nonlinear $\mathcal{H}_\infty$ Control and the Bounded Real Lemma", *Proc. 31st IEEE CDC*, Tucson, AZ., pp.1045–1049.

[6] Basar, T. and P.Bernhard (1990), *$\mathcal{H}_\infty$-Optimal Control and Related Mini-Max Problems*, Berlin: Birkhauser.

[7] Byrnes, A. Isidori and J.C.Willems(1991), "Passivity, Feedback Equivalence and the Global Stabilization of Minimum Phase Nonlinear Systems", *IEEE Trans. AC.*, vol.AC-36, pp.1228–1240.

[8] Desoer, C.A. and M. Vidyasagar(1975), *Feedback Systems: Input-Output Properties*, New York: Academic Press.

[9] Doyle, J.C. (1984), "Lecture Notes in Advances in Multivariable Control", *ONR/Honeywell Workshop*, Minneapolis, MN.

[10] Doyle, J.C., T.T.Georgiou and M.C.Smith (1992), "The Parallel Projection Operators of a Nonlinear Feedback System", *Proc. 31st IEEE CDC*, Tucson, AZ., pp.1050–1054.

[11] Doyle, J.C., K.Glover, Khargonekar and B.Francis (1989), "State-Space Solutions to Standard $\mathcal{H}_2$ and $\mathcal{H}_\infty$ Control Problems", *IEEE Trans. AC*, vol.AC-34, pp.831 – 847.

[12] Foias, C. and A. Tannenbaum (1989a), Weighted Optimization Theory for Nonlinear Systems, *SIAM J. Contr. Opt.*, vol.27, pp.842 – 859.

[13] Foias, C. and A. Tannenbaum (1989b), "Nonlinear $\mathcal{H}_\infty$ Theory", *Robust Control of Linear Systems and Nonlinear Control* (M.A. Kaashoek, J.H. van Schuppen and A.C.M. Ran Eds.), Boston: Birkhauser, pp.267 – 276.

[14] Francis, B.A. (1987) *A Course in $\mathcal{H}_\infty$ Control Theory*, Berlin: Springer-Verlag.

[15] Glad, S.T.(1987), "Robustness of Nonlinear State Feedback — A Survey", *Automatica*, vol.23, pp.425–435.

[16] Glover, K. and J.C.Doyle (1989a), "State Space Formulae for All Stabilizing Controllers That Satisfy an $\mathcal{H}_\infty$ Norm Bound and Relations to Risk Sensitivity", *Syst. Contr. Lett.*, vol.11, pp.167 – 172.

[17] Glover, K. and J.C.Doyle (1989b), "A State Space Approach to $\mathcal{H}_\infty$ Optimal Control", *Three Decades of Mathematical System Theory* (H.Nijmeijer, J.M.Schumacher Eds.), Berlin: Springer-Verlag.

[18] Hahn, W. (1967), *Stability of Motion* (A.P.Baartz Tr.), New York: Springer-Verlag.

[19] Hill, D.(1992), " Dissipative Nonlinear Systems: Basic Properties and Stability Analysis", *Proc. 31st IEEE CDC*, Tucson, AZ., pp.3259–3264.

[20] Hill, D. and P.J.Moylan (1980), "Connections between finite gain and asymptotic stability", *IEEE Trans. AC*, vol.AC-25, pp.931–936.

[21] Isidori, A.(1989), *Nonlinear Control Systems: An Introduction* (2nd ed.), Berlin: Springer-Verlag.

[22] Isidori, A.(1992), "Dissipation Inequalities in Nonlinear $\mathcal{H}_\infty$-Control", *Proc. 31st IEEE CDC*, Tucson,AZ., pp.3265–3270.

[23] Isidori, A.(1993), "Necessary Conditions in Nonlinear $\mathcal{H}_\infty$ Control", *2nd European Control Conference*, Groningen, June 28 – July 1, 1993.

[24] Isidori, A. and A. Astolfi (1992a), "Nonlinear $\mathcal{H}_\infty$-Control via Measurement Feedback", *J. Math. Syst. Estim. Contr.*, vol.2, pp.31–44.

[25] Isidori, A. and A. Astolfi (1992b), "Disturbance Attenuation and $\mathcal{H}_\infty$ Control via Measurement Feedback in Nonlinear Systems", *IEEE Trans. AC*, vol.AC-37, pp.1283–1293.

[26] Kalman, R.E. (1963), "The Theory of Optimal Control and the Calculus of Variations", *Mathematical Optimization Techniques* (R.Bellman ed.), University of California Press, pp.309–331.

[27] Lu, W.M., K.Zhou and J.C.Doyle (1991a), "A State-Space Approach to Youla-Parametrization of Stabilizing Controller", *Preprint.*

[28] Lu, W.M., K.Zhou and J.C.Doyle (1991b), "Stabilization of LFT Systems", *Proc. 30th IEEE CDC*, Brighton, England, pp.1239–1244.

[29] Lukes, D.L.(1969), "Optimal Regulation of Nonlinear Dynamical Systems", *SIAM J. Control*, vol.7, pp.75–100.

[30] Mageirou, E.F. and Y.C. Ho (1977), "Decentralized Stabilization via Game Theoretic Methods", *Automatica*, vol.13, pp.393–399.

[31] Moylan, P.J. (1974), "Implications of Passivity in a Class of Nonlinear Systems", *IEEE Trans. AC*, vol.AC-19, pp.373–381.

[32] Petersen, I.R., B.D.O.Anderson and E.A.Jonckheere (1991), "A First Principles Solution to the Non-Singular $\mathcal{H}_\infty$ Control Problem", *Int. J. Robust and Nonl. Contr.*, vol.1, pp.171–185.

[33] Redheffer, R.M. (1960), "On a Certain Linear Fractional Transformation", *J. Math. Phys.*, vol.39, pp.269 –286.

[34] Safonov, M.G. and D.J.N.Limebeer and R.Y.Chiang (1989), "Simplifying the $\mathcal{H}_\infty$ Theory via Loop Shifting, Matrix-Pencil and Descriptor Concepts", *Int. J. Control*, vol.50, pp.2467–2488.

[35] van der Schaft, A.J. (1991), "On a State Space Approach to Nonlinear $\mathcal{H}_\infty$-Control", *Syst. Contr. Lett.*, vol.16, pp.1–8.

[36] van der Schaft, A.J. (1992), "$\mathcal{L}_2$-Gain Analysis of Nonlinear Systems and Nonlinear State Feedback $\mathcal{H}_\infty$-Control", *IEEE Trans. AC*, Vol.AC-37,pp.770–784.

[37] van der Schaft, A.J. (1993), "Nonlinear State Space $\mathcal{H}_\infty$ Control Theory", *Perspectives in Control*(eds. H.L.Trentelman and J.C.Willems), Birkhauser; (at the occasion of the *2nd European Control Conference*, Groningen, June 28 –July 1, 1993).

[38] Vidyasagar, M(1980), "Decomposition Techniques for Large-Scale Systems with Non-additive Interconnections: Stability and Stabilizability", *IEEE Trans. AC*, vol.AC-25, pp.773–779.

[39] Vidyasagar, M(1993), *Nonlinear Systems Analysis* (2nd ed.), Englewood Cliffs, NJ: Prentice Hall.

[40] Willems, J.C.(1971a), *The Analysis of Feedback Systems*, Cambridge, MA: MIT Press.

[41] Willems, J.C.(1971b), "The Generation of Lyapunov Functions for Input-Output Stable Systems", *SIAM J. Control*, vol.9, pp.105–133.

[42] Willems, J.C.(1971c), "Least Squares Stationary Optimal Control and the Algebraic Riccati Equation", *IEEE Trans. AC*, vol.AC-16, pp.612–634.

[43] Willems, J.C.(1972), "Dissipative Dynamical Systems", *Arch. Rat. Mech. Anal.*, vol.45, pp.321–393.

[44] Youla, D.C., H.A.Jabr and J.J.Bongiorno (1976), "Modern Wiener-Hopf Design of Optimal Controllers: The Multivariable Case", *IEEE Trans. AC*, vol.AC-21, pp.319–338.

[45] Zhou, K. and P.P.Khargonekar (1988), "An Algebraic Riccati Equation Approach to $\mathcal{H}_\infty$ Optimization", *Syst. Contr. Lett.*, vol.11, pp.85–91.