CDS

TECHNICAL MEMORANDUM NO. CIT-CDS 93-012
June 21, 1993

"Robust Control Structure Selection"

Jay H. Lee, Richard D. Braatz, Manfred Morari and Andrew Packard

Control and Dynamical Systems
California Institute of Technology
Pasadena, CA 91125

Robust Control Structure Selection

Jay H. Lee

Department of Chemical Engineering
Auburn University
Auburn, AL 36849-5127

Richard D. Braatz*
Manfred Morari†

Department of Chemical Engineering
California Institute of Technology
Pasadena, California 91125

Andrew Packard

Department of Mechanical Engineering
University of California, Berkeley
Berkeley, California 94720

Control and Dynamical Systems (CDS) Technical Report

June 10, 1993

Abstract

Screening tools for control structure selection in the presence of model/plant mismatch are developed in the context of the Structured Singular Value (μ) theory. The developed screening tools are designed to aid engineers in the elimination of undesirable control structure candidates for which a robustly performing controller does not exist. Through application on a multi-component distillation column, it is demonstrated that the developed screening tools can be effective in choosing an appropriate control structure while previously existing methods such as the Condition Number Criterion can lead to erroneous results.

1 Introduction

Practical control problems often involve more actuators and sensors than are needed for designing effective, economically viable control systems. On a distillation column, for example, there are at least four actuators and as many temperature measurements as there are trays, possibly hundreds,

*supported by the Fannie and John Hertz Foundation

†To whom all correspondence should be addressed: phone (818)356-4186, fax (818)568-8743, e-mail MM@IMC.CALTECH.EDU

that can be utilized for composition control. In practice, one does not use all the available actuators and sensors for composition control since two of the four actuators must be used for inventory control and the use of all the temperature measurements leads to an unnecessarily complex and expensive control system. An appropriate set of actuators and sensors must be selected from the available candidates, and subsequently, partitioned and paired for decentralized control. Control structure selection refers to both actuator/sensor selection and partitioning/pairing. The partitioning/pairing problem for decentralized control has been studied extensively and many practical tools such as the Relative Gain Array and other interaction measures have been proposed (Bristol, 1966; Niederlinski, 1971; Grosdidier & Morari, 1986). In this paper, we will concentrate on the problem of actuator/sensor selection.

The main question arising in control structure selection is as follows: "What makes one control structure more desirable than another?" The closed-loop performance achievable for the plant *model* (the achievable *nominal* performance) is clearly an important criterion. It is determined by factors such as right-half-plane (RHP) zeros, delays, and signal-to-noise ratios of the measurements. When expressed through quantitative measures like the H_2 or H_∞ norms, it can be easily computed through standard optimization techniques (Doyle *et al.*, 1989). Besides these well-known factors, another outstanding issue contributing to the overall closed-loop performance is model/plant mismatch. Some control structures are inherently more sensitive than others to the mismatch between the model and the real plant. Hence, any practical control structure selection criterion should address not only the achievable *nominal* performance, but also the achievable *robust* performance, that is, the achievable *worst-case* performance in the presence of a prespecified level of model/plant mismatch.

Owing to the combinatorial nature of the problem, the number of potential control structures to be examined (referred to as *control structure candidates* from this point on) can be very large. Naturally, a method which can reduce the number of candidates before applying detailed analysis is of significant practical value. The first step to this should be to eliminate the candidates for which a controller achieving a desired level of robust performance does not exist *regardless of* the controller design method. The criteria that can be used to accomplish this screening will be referred to as *design-independent screening tools.* This screening leaves candidates for which a control system with satisfactory performance potentially exists. After the design-independent screening, an additional screening may be carried out in the context of a particular design method. The criteria that assume a specific controller design approach will be called *design-dependent screening tools.*

Traditionally, most research on control structure selection was carried out in the stochastic optimal control setting. Therefore, all the developed criteria were based on the achievable nominal performance (Kumar & Seinfeld, 1978a-b; Harris *et al.*, 1980). Model/plant mismatch was taken into account in *ad hoc* ways, for example, mimicking it through arbitrarily chosen state-excitation noise. In the late 1970s, there were some efforts to bring rigorous descriptions of model uncertainty into the control structure selection problem. In the context of secondary measurement selection, Brosilow and coworkers (Weber & Brosilow, 1972; Joseph & Brosilow, 1978) suggested what is known as the *Condition Number Criterion*, which is valid for a specific type of norm-bounded uncertainty on the model. This criterion will be examined further in this article. More recently, Skogestad *et al.* (1988) showed that the Relative Gain Array (RGA) can be used as a measure of the sensitivity of a control structure to diagonal input uncertainty. The latest contribution to the control structure selection problem came from Lee & Morari (1991a) who suggested a criterion in the context of the Structured Singular Value theory. The strengths of this criterion were that a more general model uncertainty description (known as *structured uncertainty*) could be used and that the system dynamics could be incorporated. However, all the published criteria either assume

a specific design approach or a specific uncertainty description, and therefore cannot be used as *general* design-independent screening tools. The achievable *nominal* performance (obtained through H_2 or H_∞ optimization) qualifies as a design-independent screening tool since achieving a desired performance level in the absence of model uncertainty is clearly required for achieving the same level of performance in the presence of model uncertainty. However, its practicality is limited since it fails to address one of the most important issues in control—model uncertainty.

The purpose of this article is to introduce a set of *design-independent* screening tools that can be used to reduce the number of control structure candidates. The approach is based on the Structured Singular Value theory, therefore allowing a general structured norm-bounded uncertainty description.

2 General Framework

2.1 Structured Singular Value

The Structured Singular Value ($\mu : \mathcal{C}^{n\times n} \times \Delta \to \mathcal{R}_{0+}$) is defined as follows:

Definition 1 Structured Singular Value (μ)
Let $M \in \mathcal{C}^{n\times n}$ and define the set $\mathbf{\Delta}$ as follows:

$$\mathbf{\Delta} = \left\{ \operatorname{diag}[\delta_1 I_{r_1}, \cdots, \delta_m I_{r_m}, \Delta_1 \cdots, \Delta_\ell]; \delta_j \in \mathcal{C}, \Delta_i \in \mathcal{C}^{p_i \times p_i}; \sum_{j=1}^{m} r_j + \sum_{i=1}^{\ell} p_i = n \right\} \tag{1}$$

Then $\mu_\Delta(M)$ (μ of M with respect to the uncertainty structure $\mathbf{\Delta}$) is defined as

$$\mu_\Delta(M) = \begin{cases} \left[\min_{\Delta} \{\bar{\sigma}(\Delta) : \det(I + M\Delta) = 0,\ \Delta \in \mathbf{\Delta}\}\right]^{-1} \\ 0 \text{ if } \exists \text{ no } \Delta \in \mathbf{\Delta} \text{ such that } \det(I + M\Delta) = 0 \end{cases} \tag{2}$$

The structured singular value has the following lower and upper bounds:

$$\max_{Q\in\mathcal{Q}} \rho(QM) = \mu_\Delta(M) \le (\approx) \inf_{D\in\mathcal{D}} \bar{\sigma}(DMD^{-1}) \tag{3}$$

where

$$\mathcal{Q} = \{Q \in \mathbf{\Delta} : Q^*Q = I_n\} \tag{4}$$

$$\mathcal{D} = \{\operatorname{diag}[D_1, \cdots, D_m, d_1 I_{p_1}, \cdots, d_\ell I_{p_\ell}] : D_i \in \mathcal{C}^{r_i\times r_i}, D_i = D_i^* > 0; d_j \in \mathcal{R}_+\} \tag{5}$$

$\bar{\sigma}(\cdot)$ denotes the maximum singular value, and $\rho(\cdot)$ denotes the spectral radius.

The maximum spectral radius is always equal to μ, but the maximization is nonconvex and computing the global optimum of such functions is in general difficult. In contrast, the upper bound can be formulated as a convex optimization. Though the upper bound is not necessarily equal to μ except when the number of blocks in Δ is three or less (Packard, 1988), the upper bound is almost always very close to μ (within 98-99% for most problems). For this reason the upper bound is used in most tests requiring numerical calculation of μ.

2.2 Representation of Uncertain Systems

We will use the following notations for linear fractional transformations (LFT):

$$\mathcal{F}_u(X,Y) = X_{22} + X_{21}Y(I - X_{11}Y)^{-1}X_{12} \tag{6}$$

$$\mathcal{F}_\ell(X,Y) = X_{11} + X_{12}Y(I - X_{22}Y)^{-1}X_{21} \tag{7}$$

where X is partitioned in such a way that X_{11} has the same dimension as Y^T for the upper LFT ($\mathcal{F}_u$) and X_{22} has the same dimension as Y^T for the lower LFT ($\mathcal{F}_\ell$). X and Y can be either transfer functions or complex matrices.

Figure 1 represents the general block diagram for linear systems with model uncertainty. The uncertain system is represented as the Linear Fractional Transformation (LFT) of G(s) and the L_∞-norm-bounded block Δ_u. More specifically, the true system can be any system $P_\Delta(s)$ satisfying the following conditions:

1. The frequency response matrix of the system $P_{\Delta_u}|_{s=j\omega}$ for each frequency ω belongs to the set $\mathbf{P_u}(\omega)$ where

$$\mathbf{P_u}(\omega) = \{(\mathcal{F}_u(G(j\omega),\Delta_u) : \Delta_u \in \mathbf{B\Delta_u}\} \tag{8}$$

$$\mathbf{B\Delta_u} = \{\Delta \in \mathbf{\Delta_u} : \bar{\sigma}(\Delta) \leq 1\} \tag{9}$$

$$\mathbf{\Delta_u} = \left\{\mathrm{diag}(\delta_1 I_{r_1}, \cdots, \delta_m I_{r_m}, \Delta_1, \cdots, \Delta_{\ell-1}) : \Delta_i \in \mathcal{C}^{p_i \times p_i}, \delta_j \in \mathcal{C}, \sum_i p_i + \sum_j r_j = \dim\{v_o\} = \dim\{v_i\}, 1 \leq j \leq m, 1 \leq i \leq \ell - 1\right\} \tag{10}$$

2. $P_{\Delta_u}(s)$ has the same number of right-half-plane (RHP) poles as the nominal model $P_0(s)$.

We will refer to the set of systems satisfying the above conditions as $\mathbf{P_\Pi}$. The above uncertainty type is said to be *structured* since Δ_u carries a specific block-structure as opposed to being a single unstructured block. We assumed that each Δ_i is square without loss of generality since a nonsquare block can always be expressed in terms of a square block through the use of weighting matrices.

2.3 Robust Performance

The closed-loop system is said to achieve *robust performance* if and only if $\mathcal{F}_\ell(P_{\Delta_u}, K)$ is stable $\forall P_{\Delta_u} \in \mathbf{P_\Pi}$ and satisfies the *worst-case* H_∞ performance condition

$$\max_{P_{\Delta_u} \in \mathbf{P_\Pi}} \|\mathcal{F}_\ell(P_{\Delta_u}, K)\|_\infty < 1 \tag{11}$$

It can be shown (Doyle, 1984) that robust performance is achieved if and only if the closed-loop system is nominally stable ($\mathcal{F}_\ell(P_0, K)$ is stable) and

$$\mu_{\begin{bmatrix}\Delta_u & \\ & \Delta_p\end{bmatrix}}(M(j\omega)) < 1 \quad \forall\omega \tag{12}$$

where

$$M = \begin{bmatrix} I & \\ & W_p \end{bmatrix} \mathcal{F}_\ell(G,K) \begin{bmatrix} I & \\ & W_d \end{bmatrix} \tag{13}$$

$$\mathbf{\Delta_p} = \left\{\Delta_\ell : \Delta_\ell \in \mathcal{C}^{\dim\{d'\}\times\dim\{y'_c\}}\right\} \tag{14}$$

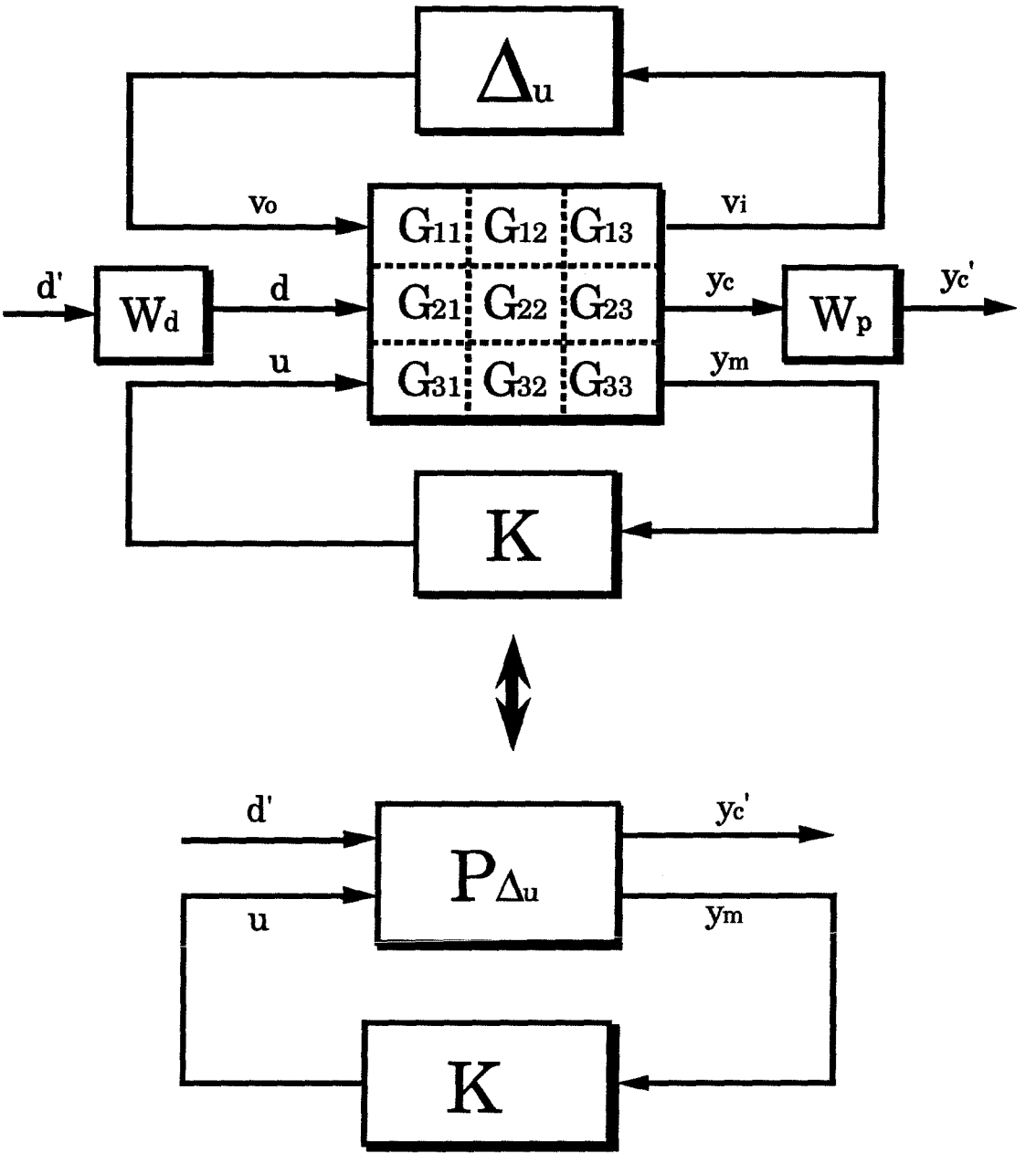

d : external signal vector (disturbances, measurement noise, reference signals)
y_c : controlled variable *error* (controlled variable - reference) vector
d' : normalized external signal vector (disturbances, measurement noise, reference signals)
y_c' : normalized controlled variable *error* vector
u : manipulated variable vector
y_m: noise-corrupt measured variable vector
v_i, v_o: internal variable vectors

Figure 1: General Block Diagram of an Uncertain System and a Feedback Controller

Again, without loss of generality, we assume that $\mathbf{\Delta_p}$ is a square block (*i.e.*, $\dim\{y_c'\} = \dim\{d'\}$).

In this article, we will approximate μ by its upper bound. This is justified not only because the upper bound is very close to μ for most cases, but since it is used in most tests involving the numerical calculation of μ. Hence, (12) is replaced with

$$\inf_{D\in\mathcal{D}_{rp}} \bar{\sigma}\left(DM(j\omega)D^{-1}\right) < 1 \quad \forall\omega \tag{15}$$

where

$$\mathcal{D}_{rp} = \{\mathrm{diag}\left[D_1,\cdots,D_m,d_1I_{p_1},\cdots,d_\ell I_{p_\ell},d_{\ell+1}I_{\dim\{y_c'\}}\right] : d_j\in\mathcal{R}_+;\ D_i\in\mathcal{C}^{r_i\times r_i}, D_i = D_i^* > 0\} \tag{16}$$

3 Design-Independent Screening Tools

In this section, we develop screening tools that can be used to eliminate control structure candidates for which no LTI controller exists meeting the robust performance requirement. First, we derive a necessary and sufficient (but untestable) condition for the existence of a controller achieving robust performance. Then, by relaxing the causality requirement of the controller, we show that we can derive necessary conditions for the existence of a controller achieving robust performance. These necessary conditions are formulated as convex optimizations and are proposed as screening tools.

3.1 Test Condition for Existence of a Causal Controller Achieving Robust Performance

Our goal is to test whether or not there exists a controller meeting the robust performance requirement for a given set of actuators and measurements. Mathematically, we test if the following condition is satisfied:

$$\inf_{K\in\mathcal{K}_s}\sup_{\omega}\inf_{D(\omega)\in\mathcal{D}_{rp}} \bar{\sigma}\left(D(\omega)\left(\left[\begin{array}{cc} I & \\ & W_p\end{array}\right]\mathcal{F}_\ell(G^{ij},K)\left[\begin{array}{cc} I & \\ & W_d\end{array}\right]\right)\Bigg|_{s=j\omega} D^{-1}(\omega)\right) < 1 \tag{17}$$

where G^{ij} denotes the plant model G with the ith set of actuators and the jth set of measurements. For simplicity of notation, we will drop the superscript $\{\cdot\}^{ij}$ from this point on. $\mathcal{K}_s$ represents the set of all stabilizing *causal* controllers. The causality of the controller implies that the controller's current/future inputs do not affect its past outputs; hence causality is required for the controller to be physically realizable. Mathematically, $\mathcal{K}_s$ is expressed as

$$\mathcal{K}_s \equiv \left\{K\in\mathcal{R}_s : \left[\begin{array}{cc} (I-G_{33}K)^{-1} & G_{33}(I-KG_{33})^{-1} \\ K(I-G_{33}K)^{-1} & (I-KG_{33})^{-1}\end{array}\right]\in\mathcal{RH}_\infty\right\} \tag{18}$$

where $\mathcal{R}_s$ represents the set of all proper rational transfer functions (of size $\dim\{u\}\times\dim\{y_m\}$) and $\mathcal{RH}_\infty$ represents the set of all proper rational transfer functions (of appropriate size) that are analytic in the closed RHP. Note that K has nonlinear constraints and also enters M in a nonlinear fashion. The following parametrization of $\mathcal{K}_s$ (Youla, 1976a-b) yields an affine parametrization of

M without any nonlinear constraints:

$$\mathcal{K}_s = \left\{K : K = (Y - TQ)(X - SQ)^{-1}, Q \in \mathcal{RH}_\infty\right\} \tag{19}$$

$$= \left\{K : K = (\tilde{X} - Q\tilde{S})^{-1}(\tilde{Y} - Q\tilde{T}), Q \in \mathcal{RH}_\infty\right\} \tag{20}$$

where (S, T) and $(\tilde{S}, \tilde{T})$ are right and left coprime factors of G_{33} respectively (*i.e.*, $G_{33} = ST^{-1} = \tilde{T}^{-1}\tilde{S}$), and $(X, Y, \tilde{X}, \tilde{Y})$ is a solution to the following Bezout identity:

$$\begin{bmatrix} \tilde{X} & -\tilde{Y} \\ -\tilde{S} & \tilde{T} \end{bmatrix} \begin{bmatrix} T & Y \\ S & X \end{bmatrix} = I \tag{21}$$

Note that for open-loop stable systems we can choose $T = -\tilde{T} = -I$, $S = -\tilde{S} = -G_{33}$, $X = -\tilde{X} = I$ and $Y = \tilde{Y} = 0$; the parametrization (19) simply becomes $\mathcal{K}_s = \{K : K = Q(I + G_{33}Q)^{-1}, Q \in \mathcal{RH}_\infty\}$. Using the parametrization (19)-(20), (17) becomes

$$\inf_{Q \in \mathcal{RH}_\infty} \sup_{\omega} \inf_{D(\omega) \in \mathcal{D}_{rp}} \bar{\sigma}\left[D(\omega)\,(N_{11} + N_{12}QN_{21})|_{s=j\omega}\, D^{-1}(\omega)\right] < 1 \tag{22}$$

where

$$N_{11} = \begin{bmatrix} I & \\ & W_p \end{bmatrix} \left\{ \begin{bmatrix} G_{11} & G_{12} \\ G_{21} & G_{22} \end{bmatrix} + \begin{bmatrix} G_{13} \\ G_{23} \end{bmatrix} T\tilde{Y} \begin{bmatrix} G_{31} & G_{32} \end{bmatrix} \right\} \begin{bmatrix} I & \\ & W_d \end{bmatrix} \tag{23}$$

$$N_{12} = \begin{bmatrix} I & \\ & W_p \end{bmatrix} \begin{bmatrix} G_{13} \\ G_{23} \end{bmatrix} T \tag{24}$$

$$N_{21} = \tilde{T} \begin{bmatrix} G_{31} & G_{32} \end{bmatrix} \begin{bmatrix} I & \\ & W_d \end{bmatrix} \tag{25}$$

Hence, the Youla parametrization leads to a closed-loop expression which is affine in the parameter Q. The only restriction on Q is that it should be analytic in the closed RHP. However, the coupling of the parameters Q and D makes the optimization required in (22) nonconvex. There is currently no method of checking (22).

It is worthwhile to mention that various methods are available enabling us to test whether nominal performance (*i.e.*, when $G_{11}, G_{12}, G_{21}, G_{31}, G_{13} = 0$) can be achieved. According to the latest method by Doyle *et al.* (1989), testing this essentially amounts to checking if positive semidefinite solutions to two Riccati equations exist and the spectral radius of the product of the two solutions is less than a certain constant. These conditions can be used for design-independent screening, but their practical value is limited since they do not address one of the most important issues in control structure selection, namely model uncertainty.

3.2 Test Condition for Existence of an Acausal Controller Achieving Robust Performance

At this point, let us consider dropping the *causality* requirement on Q. Hence, we allow the controller parameter Q to be *acausal* meaning the current/future inputs of parameter Q can affect its past outputs. This can lead to a physically unrealizable controller that can act before the disturbance occurs. Clearly the set of all acausal controllers includes all causal controllers.

Mathematically, the relaxation of causality of Q is equivalent to replacing the requirement of $Q \in \mathcal{RH}_\infty$ with $Q \in \mathcal{R}_s$. The condition (22) with $Q \in \mathcal{R}_s$ is equivalent to the following frequency-by-frequency condition:

$$\inf_{Q \in \mathcal{C}^K} \inf_{D \in \mathcal{D}_{rp}} \bar{\sigma}(D(N_{11} + N_{12} Q N_{21})|_{s=j\omega} D^{-1}) < 1 \quad \forall \omega \tag{26}$$

The superscript $\{\cdot\}^K$ in $\mathcal{C}^K$ indicates that it is the set of complex matrices of size $\dim\{u\} \times \dim\{y_m\}$. Another interpretation of replacing $Q \in \mathcal{RH}_\infty$ with $Q \in \mathcal{R}_s$ in the context of a causal controller is that we relax the internal stability requirement.

Relaxation of the causality or stability requirement introduces conservativeness to the condition (*i.e.*, satisfying (26) does not imply the existence of a causal K achieving robust performance), but the conservativeness is expected to be significant only around crossover. For example, condition (26) restricted to $\omega = 0$ is a necessary and sufficient condition for the existence of a controller gain matrix meeting the specified worst-case steady state requirement. For most chemical processes, such a condition can be a very useful screening tool since steady-state error is often of primary importance.

Defining $\tilde{Q} = TQ\tilde{T} + T\tilde{Y}$ and noting that $\{\tilde{Q} : \tilde{Q} \in \mathcal{C}^K\} \equiv \{TQ\tilde{T} + T\tilde{Y}\big|_{s=j\omega} : Q \in \mathcal{C}^K\}$ since $T(j\omega)$ is nonsingular for all ω, we arrive at the following necessary and sufficient condition for the existence of an *acausal* Q satisfying (22):

Theorem 1 *Let N_{11}, N_{12} and N_{21} be defined as in (23)-(25). Then*

$$\inf_{Q \in \mathcal{R}_s} \inf_{D \in \mathcal{D}_{rp}} \bar{\sigma}(D(N_{11} + N_{12} Q N_{21})|_{s=j\omega} D^{-1}) < 1 \quad \forall \omega \tag{27}$$

if and only if

$$\inf_{\tilde{Q} \in \mathcal{C}^K} \inf_{D \in \mathcal{D}_{rp}} \bar{\sigma}(D(\tilde{N}_{11} + \tilde{N}_{12} \tilde{Q} \tilde{N}_{21})|_{s=j\omega} D^{-1}) < 1 \quad \forall \omega \tag{28}$$

where

$$\tilde{N}_{11} = \begin{bmatrix} I & \\ & W_p \end{bmatrix} \begin{bmatrix} G_{11} & G_{12} \\ G_{21} & G_{22} \end{bmatrix} \begin{bmatrix} I & \\ & W_d \end{bmatrix} \tag{29}$$

$$\tilde{N}_{12} = \begin{bmatrix} I & \\ & W_p \end{bmatrix} \begin{bmatrix} G_{13} \\ G_{23} \end{bmatrix} \tag{30}$$

$$\tilde{N}_{21} = \begin{bmatrix} G_{31} & G_{32} \end{bmatrix} \begin{bmatrix} I & \\ & W_d \end{bmatrix} \tag{31}$$

Note that with the above reparametrization there is no need for finding the double coprime factor of G_{22} and solving the Bezout identity (21) since the expression for $\tilde{N}$ involves only G and frequency-dependent weighting matrices.

3.3 Formulation of Test Conditions into Screening Tools

So far, we have shown that (28) is a necessary condition for the existence of a controller achieving robust performance. In this section, we show that condition (28) can be transformed into two separate conditions which can be addressed via convex optimization.

We first reparametrize $\tilde{Q}$ such that the matrices pre- and post-multiplying $\tilde{Q}$ in (28) are both unitary. Note that $\tilde{Q} \in \mathcal{C}^K$ is equivalent to $\tilde{Q} \in \{(\tilde{N}_{12}^*\tilde{N}_{12})^{-1/2}\hat{Q}(\tilde{N}_{21}\tilde{N}_{21}^*)^{-1/2}|_{s=j\omega} : \hat{Q} \in \mathcal{C}^K\}$ where $\{\cdot\}^*$ denotes the adjoint operator (*i.e.*, $N^*(s) = N^T(-s)$). The notation $\{\cdot\}^*$ will also be used to represent the complex conjugate transpose for the case of a constant matrix. The condition (28) can be now transformed into

$$\inf_{\hat{Q}\in\mathcal{C}^K} \inf_{D\in\mathcal{D}_{rp}} \bar{\sigma}(D(\tilde{N}_{11} + \hat{N}_{12}\hat{Q}\hat{N}_{21})|_{s=j\omega}D^{-1}) < 1 \quad \forall\omega \tag{32}$$

where $\hat{N}_{12} = \tilde{N}_{12}(\tilde{N}_{12}^*\tilde{N}_{12})^{-1/2}$ and $\hat{N}_{21} = (\tilde{N}_{21}\tilde{N}_{21}^*)^{-1/2}\tilde{N}_{21}$ are unitary matrices for all ω. The following theorem shows that the condition (32) can be checked through two conditions each of which is a convex optimization problem.

Theorem 2 *Let $\alpha \in \mathcal{R}_+, R \in \mathcal{C}^{n\times n}, U \in \mathcal{C}^{n\times r}$ and $V \in \mathcal{C}^{t\times n}$. Suppose $U^*U = I_r, VV^* = I_t$ and $U_\perp \in \mathcal{C}^{n\times(n-r)}$ and $V_\perp \in \mathcal{C}^{(n-t)\times n}$ are chosen such that $\begin{bmatrix} U & U_\perp \end{bmatrix} \in \mathcal{C}^{n\times n}$ and $\begin{bmatrix} V \\ V_\perp \end{bmatrix} \in \mathcal{C}^{n\times n}$ are unitary. Then*

$$\inf_{Q\in\mathcal{C}^{r\times t}} \inf_{D\in\mathcal{D}_{rp}} \bar{\sigma}(D(R + UQV)D^{-1}) < \alpha \tag{33}$$

if and only if $\exists X \in \mathcal{D}_{rp}$ such that

$$\lambda_{max}[V_\perp(R^*XR - \alpha^2 X)V_\perp^*] < 0 \tag{34}$$

and

$$\lambda_{max}[U_\perp^*(RX^{-1}R^* - \alpha^2 X^{-1})U_\perp] < 0 \tag{35}$$

(Proof) See Appendix.

Comments:

1. Conditions (34) and (35) are convex with respect to X and X^{-1} respectively. Each of the two conditions is a necessary condition for the existence of a controller achieving robust performance and can be checked through standard algorithms (Boyd & Barratt, 1990).

2. Checking the conditions (34)-(35) together is more difficult and is not resolved at the moment except for the following special cases:

   - **Full Control Case:**
     If U has a full row rank, condition (35) drops out and (34) is necessary *and* sufficient for (33).
   - **Full Information Case:**
     If V has a full column rank, condition (34) drops out and (35) is necessary *and* sufficient for (33).
   - **2 Full-Block Case:**
     For the case of 2 full-block Δ, (33) is

$$\inf_{Q\in\mathcal{C}^{r\times t}} \inf_{d_1,d_2\in\mathcal{R}_+} \bar{\sigma}\left(\begin{bmatrix} d_1 I & \\ & d_2 I \end{bmatrix}(R + UQV)\begin{bmatrix} \frac{1}{d_1}I & \\ & \frac{1}{d_2}I \end{bmatrix}\right) < \alpha \tag{36}$$

By multiplying and then dividing the expression by d_2, (36) becomes

$$\inf_{Q\in\mathcal{C}^{r\times t}}\ \inf_{d\in\mathcal{R}_+}\ \bar{\sigma}\left(\begin{bmatrix} dI & \\ & I\end{bmatrix}(R+UQV)\begin{bmatrix} \frac{1}{d}I & \\ & I\end{bmatrix}\right) < \alpha \tag{37}$$

where $d = \frac{d_1}{d_2}$. Hence, for 2 full-block cases, conditions (34)-(35) can be expressed as follows:

$$g(d) \equiv \lambda_{max}\left[V_\perp\left(R^*\begin{bmatrix} dI & \\ & I\end{bmatrix}R - \alpha^2\begin{bmatrix} dI & \\ & I\end{bmatrix}\right)V_\perp^*\right] < 0 \tag{38}$$

$$h(1/d) \equiv \lambda_{max}\left[U_\perp^*\left(R\begin{bmatrix} 1/dI & \\ & I\end{bmatrix}R^* - \alpha^2\begin{bmatrix} 1/dI & \\ & I\end{bmatrix}\right)U_\perp\right] < 0 \tag{39}$$

$\mathcal{T}_{FC} \equiv \{s\in\mathcal{R}_+ : g(s) < 0\}$ and $\mathcal{T}_{FI} \equiv \left\{t\in\mathcal{R}_+ : h(\frac{1}{t}) < 0\right\}$ are open intervals (since $g(s)$ and $h(t)$ are convex with respect to s and t), so it can easily be checked if they intersect.

Using the results from Theorem 2 with $\alpha = 1$, we now propose the following screening tools:

Design-Independent Screening Tool #1 *Eliminate control structure candidates for which*

$$\mathcal{T}_{FC}(\omega)\bigcap\mathcal{T}_{FI}(\omega) = \emptyset \quad \textit{for some } \omega \tag{40}$$

where

$$\mathcal{T}_{FC}(\omega) = \left\{s\in\mathcal{R}_+ : \lambda_{\max}\left[(\hat{N}_{21})_\perp\left((\tilde{N}_{11})^*\begin{bmatrix} sI & \\ & I\end{bmatrix}\tilde{N}_{11} - \begin{bmatrix} sI & \\ & I\end{bmatrix}\right)(\hat{N}_{21})_\perp^*\Big|_{s=j\omega}\right] < 0\right\} \tag{41}$$

$$\mathcal{T}_{FI}(\omega) = \left\{t\in\mathcal{R}_+ : \lambda_{\max}\left[(\hat{N}_{12})_\perp^*\left(\tilde{N}_{11}\begin{bmatrix} \frac{1}{t}I & \\ & I\end{bmatrix}(\tilde{N}_{11})^* - \begin{bmatrix} \frac{1}{t}I & \\ & I\end{bmatrix}\right)(\hat{N}_{12})_\perp\Big|_{s=j\omega}\right] < 0\right\} \tag{42}$$

for any combination of two of the given Δ blocks.

Design-Independent Screening Tool #2 *Eliminate control structures for which*

$$\inf_{X\in\mathcal{D}_{rp}}\lambda_{max}\left[(\hat{N}_{21})_\perp(\tilde{N}_{11}^*X\tilde{N}_{11} - X)(\hat{N}_{21})_\perp^*|_{s=j\omega}\right] \geq 0 \quad \text{for some } \omega \tag{43}$$

Design Independent Screening Tool #3 *Eliminate control structures for which*

$$\inf_{X\in\mathcal{D}_{rp}}\lambda_{max}\left[(\hat{N}_{12})_\perp^*(\tilde{N}_{11}X\tilde{N}_{11}^* - X)(\hat{N}_{12})_\perp|_{s=j\omega}\right] \geq 0 \quad \text{for some } \omega \tag{44}$$

We note that the above screening tools, although manageable, are numerically more complex than conventional tools like the RGA or the condition number. However, these other tools do not address the issue of uncertainty in a general rigorous way like the tools above. Examples illustrating the importance of considering uncertainty (and the structure of the uncertainty) when selecting actuators and sensors are given, for example, by Skogestad *et al.* (1988) and Lee & Morari (1991a).

4 Comparison with Other Screening Tools: Multicomponent Distillation

We apply the screening tools to a multi-component distillation column control problem studied by Weber & Brosilow (1972). We compare the proposed tools with Brosilow's criteria because these are well-known to many process control researchers, and the papers describing these tools are widely referenced and are considered by many to be classics in the field. We will discuss how Brosilow's criteria (and a generalized version useful for comparison with our criteria) leads to a counter-intuitive result. On the other hand, the new screening tools lead to physically consistent results and are helpful in analyzing the sensitivity of various control structures to uncertainty.

4.1 Problem Description

The schematic diagram of the column and proposed control configuration is shown in Figure 2. It is a sixteen stage, five component distillation column with a total condenser and a total reboiler. The detailed information on the operating conditions and modelling assumptions can be found in Brosilow & Tong (1978). The control objective is to maintain constant overhead and bottom product compositions (y_D and x_B respectively) in the presence of feed disturbances. The manipulated variables are the reflux ratio (L) and the vapor boilup rate (V). The temperature measurements are available on the 1st, 3rd, 8th, 14th, and 16th trays (T_1, T_3, T_8, T_{14} and T_{16} respectively) of the column, where T_1 is located at the bottom of the column. The model for the input-output relationships between disturbances/manipulated variables and controlled/measured variables are as follows:

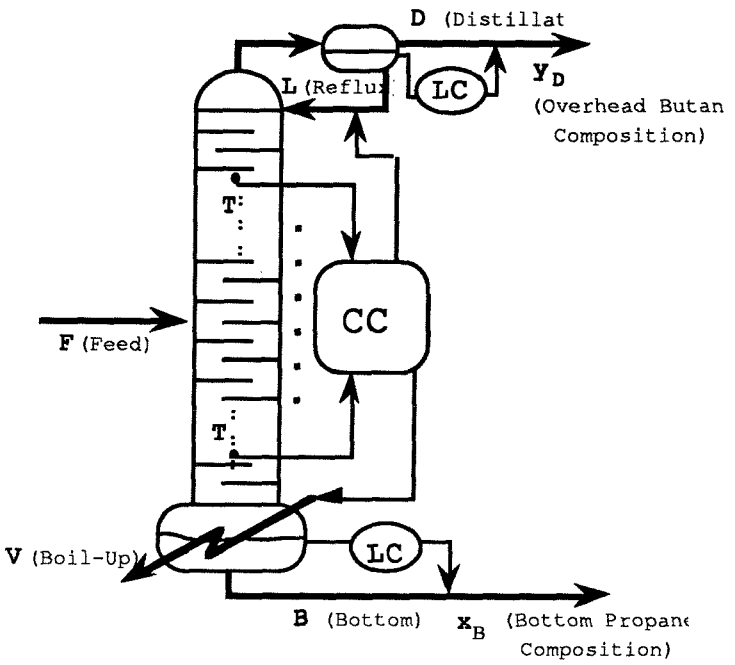

Figure 2: Schematic Diagram of a Multi-Component Distillation Column and Its Control Structure

	d_1	d_2	d_3	d_4	d_5	L	V
y_D	$\frac{-0.188}{72s+1}$	$\frac{-0.163}{72s+1}$	$\frac{0.0199}{70s+1}$	$\frac{0.0043}{80s+1}$	$\frac{0.002}{85s+1}$	$\frac{-0.173}{70s+1}$	$\frac{0.0305}{75s+1}$
x_B	$\frac{0.0174}{15s+1}$	$\frac{0.0259}{13s+1}$	$\frac{0.0045}{4s+1}$	$\frac{-0.00029}{3s+1}$	$\frac{-0.00099}{3s+1}$	$\frac{0.015}{18s+1}$	$\frac{-0.00768}{7s+1}$
T_1	$\frac{-7.99}{9s+1}$	$\frac{-9.78}{9s+1}$	$\frac{-5.28}{5s+1}$	$\frac{3.59}{8s+1}$	$\frac{6.09}{5s+1}$	$\frac{7.47}{8s+1}$	$\frac{2.70}{4s+1}$
T_3	$\frac{-11.29}{12s+1}$	$\frac{-15.91}{12s+1}$	$\frac{-4.23}{5s+1}$	$\frac{3.63}{8s+1}$	$\frac{4.75}{5s+1}$	$\frac{9.80}{15s+1}$	$\frac{3.79}{5s+1}$
T_8	$\frac{-18.28}{5s+1}$	$\frac{-16.43}{10s+1}$	$\frac{-0.47}{5s+1}$	$\frac{3.96}{3s+1}$	$\frac{4.60}{1.5s+1}$	$\frac{8.20}{30s+1}$	$\frac{2.30}{18s+1}$
T_{14}	$\frac{-42.02}{50s+1}$	$\frac{-35.92}{70s+1}$	$\frac{4.45}{65s+1}$	$\frac{1.10}{70s+1}$	$\frac{0.46}{75s+1}$	$\frac{36.0}{65s+1}$	$\frac{6.82}{70s+1}$
T_{16}	$\frac{-50.47}{25s+1}$	$\frac{-25.26}{75s+1}$	$\frac{3.15}{70s+1}$	$\frac{0.68}{78s+1}$	$\frac{0.32}{80s+1}$	$\frac{30.0}{67s+1}$	$\frac{3.46}{70s+1}$

(45)

To facilitate the exposition, we limit ourselves to the following combinations of temperature measurements:

One Temperature Measurement:

$$y_m^1 = T_1 \quad y_m^2 = T_2 \quad y_m^3 = T_8 \quad y_m^4 = T_{14} \quad y_m^5 = T_{16} \tag{46}$$

Two Temperature Measurements:

$$y_m^6 = \begin{pmatrix} T_1 \\ T_3 \end{pmatrix} \quad y_m^7 = \begin{pmatrix} T_1 \\ T_8 \end{pmatrix} \quad y_m^8 = \begin{pmatrix} T_1 \\ T_{14} \end{pmatrix} \quad y_m^9 = \begin{pmatrix} T_1 \\ T_{16} \end{pmatrix} \quad y_m^{10} = \begin{pmatrix} T_3 \\ T_8 \end{pmatrix}$$

$$y_m^{11} = \begin{pmatrix} T_3 \\ T_{14} \end{pmatrix} \quad y_m^{12} = \begin{pmatrix} T_3 \\ T_{16} \end{pmatrix} \quad y_m^{13} = \begin{pmatrix} T_8 \\ T_{14} \end{pmatrix} \quad y_m^{14} = \begin{pmatrix} T_8 \\ T_{16} \end{pmatrix} \quad y_m^{15} = \begin{pmatrix} T_{14} \\ T_{16} \end{pmatrix}$$

Three Temperature Measurements:

$$y_m^{16} = \begin{pmatrix} T_8 & T_{14} & T_{16} \end{pmatrix}^T \tag{47}$$

Four Temperature Measurements:

$$y_m^{17} = \begin{pmatrix} T_3 & T_8 & T_{14} & T_{16} \end{pmatrix}^T \tag{48}$$

Five Temperature Measurements:

$$y_m^{18} = \begin{pmatrix} T_1 & T_3 & T_8 & T_{14} & T_{16} \end{pmatrix}^T \tag{49}$$

4.2 Reformulation of Brosilow's Criteria

Without loss of generality, we assume that W_d is chosen as a scalar-times-identity (kI) for the discussion in this section.

Brosilow and coworkers (Weber & Brosilow, 1972; Joseph & Brosilow, 1978) suggested the following two *steady-state* criteria for measurement selection:

1. **Minimization of Projection Error (Nominal Estimation Error)**
   Minimize the projection error $\mathcal{E}_\infty$ where

$$\mathcal{E}_\infty = \bar{\sigma}(R) \tag{50}$$

   where

$$R = G_{y_c d} - G_{y_c d} G_{y_m d}^T (G_{y_m d} G_{y_m d}^T)^{-1} G_{y_m d} \tag{51}$$

2. **Minimization of Condition Number (Sensitivity to Modelling Error)**
   Minimize the condition number κ of $G_{y_m d}$ where

$$\kappa(G_{y_m d}) = \frac{\bar{\sigma}(G_{y_m d})}{\underline{\sigma}(G_{y_m d})} \tag{52}$$

They indicate that (50) tends to decrease and (52) tends to increase as the number of the measurements is increased, and leave the final tradeoff to engineering judgment. We note that the projection error as originally defined by Brosilow and coworkers is not that of (50), but

$$\mathcal{E}_2 = \sqrt{\frac{\text{trace}\{RR^T\}}{\text{trace}\{G_{y_c d} G_{y_c d}^T\}}} \tag{53}$$

The original definition of the projection error is appropriate in the stochastic setting since it can be interpreted as the relative ratio between the closed-loop and the open-loop variances of the output when the disturbance vector is a zero-mean random variable with a scalar-times-identity covariance matrix (*i.e.*, $E\{d\} = 0, E\{dd^T\} = k^2 I$). Note that for measurement selection minimizing $\mathcal{E}_2$ is the same as minimizing $\sqrt{\text{trace}\{RR^T\}}$ since $\sqrt{\text{trace}\{G_{y_c d} G_{y_c d}^T\}}$ is independent of measurements. In the worst-case error setting of H_∞ control, $\mathcal{E}_\infty$ is an appropriate generalization of the term $\sqrt{\text{trace}\{RR^T\}}$ in (53), since it is the maximum attainable 2-norm of y_c for all d such that $\|d\|_2 < 1$.

Brosilow's criteria may be justified by deriving the expression for the worst-case uncertainty under a particular uncertainty structure. Suppose that the model error on $G_{y_m d}$ can be described as follows:

Uncertainty A: Unstructured Multiplicative Output Uncertainty

$$\{G_{y_m d}\}_{\text{true}} = (I + w\Delta)G_{y_m d}; \quad \Delta \in \mathbf{\Delta} \equiv \left\{\Delta \in \mathcal{R}^{\dim\{y_m\}\times\dim\{y_m\}} : \bar{\sigma}(\Delta) \leq 1\right\} \tag{54}$$

where w is a real positive scalar indicating the magnitude of the uncertainty. Furthermore, assume that the least-squares type controller will be used. More precisely, K is to be designed such that

$$K(0) = Q_{\text{ls}}(I + G_{y_m u}(0)Q_{\text{ls}})^{-1} \tag{55}$$

$$Q_{\text{ls}} = (G_{y_c u})_r^{-1} G_{y_c d} G_{y_m d}^T (G_{y_m d} G_{y_m d}^T)^{-1} \tag{56}$$

The above choice of $K(0)$ minimizes the steady-state error variance of the output y_c in the presence of random step disturbances d (d is an *integrated* white noise of a scalar-times-identity covariance matrix). Here, we assumed that $(G_{y_c u})_r^{-1}$, a right inverse of $G_{y_c u}$, exists. When $G_{y_c u}$ does not have a full column rank, $(G_{y_c u})_r^{-1}$ should be replaced by $(G_{y_c u}^T G_{y_c u})^{-1} G_{y_c u}^T$. However, we do not consider this case in order to simplify the derivation. The closed-loop expression from d to y_c with the above choice of K is as follows:

$$\mathcal{F}_{y_c d}(0) = \left[G_{y_c d} - G_{y_c d} G_{y_m d}^T (G_{y_m d} G_{y_m d}^T)^{-1} G_{y_m d}\right] - w\left[G_{y_c d} G_{y_m d}^T (G_{y_m d} G_{y_m d}^T)^{-1} \Delta G_{y_m d}\right] \tag{57}$$

Hence, the worst-possible 2-norm of the output y_c for $\|d\|_2 < 1$ is expressed as

$$\begin{aligned}
\max_{\Delta\in\mathbf{\Delta}} \bar{\sigma}(\mathcal{F}_{y_c d}(0)) &\leq \mathcal{E}_\infty + w \max_{\Delta\in\mathbf{\Delta}} \bar{\sigma}\left[G_{y_c d} G_{y_m d}^T (G_{y_m d} G_{y_m d}^T)^{-1} \Delta G_{y_m d}\right] \\
&= \mathcal{E}_\infty + w\bar{\sigma}\left[G_{y_c d} G_{y_m d}^T (G_{y_m d} G_{y_m d}^T)^{-1}\right] \bar{\sigma}\left[G_{y_m d}\right] \\
&\leq \mathcal{E}_\infty + w\bar{\sigma}\left[G_{y_c d}\right] \bar{\sigma}\left[G_{y_m d}^T (G_{y_m d} G_{y_m d}^T)^{-1}\right] \bar{\sigma}\left[G_{y_m d}\right] \\
&= \mathcal{E}_\infty + w'\kappa(G_{y_m d}) \qquad (\text{where } w' = w\bar{\sigma}(G_{y_c d}))
\end{aligned} \tag{58}$$

Hence, minimizing a weighted sum of the projection error and the condition number of $G_{y_m d}$ corresponds to minimizing an upper bound of the worst-case closed-loop error. The original derivation of the Condition Number Criterion in a stochastic optimal control setting by Brosilow and coworkers also assumed that the least-squares controller would be used (their uncertainty description, however, is somewhat different). While Brosilow and coworkers left balancing the projection error and condition number to engineering judgement, we have derived here a suitable scalar measure combining the two quantities.

4.3 Physical Inconsistency of Brosilow's Criteria

Above we derived an upper bound on the worst-case steady-state closed-loop error in terms of Brosilow's criteria. Actually, we can calculate the exact value for the worst-case steady-state closed-loop error for the least-squares controller by using the method suggested by Lee & Morari (1991b). Figure 3 shows the worst-possible closed-loop error calculated through Lee & Morari's method (as well as the projection error and the condition number) for each measurement candidate when w is set at 0.1. One important point about the result is that the closed-loop errors become worse as more measurements are added. This is counter-intuitive—adding more measurements should not degrade the achievable performance since one can always set any measurement's effect to be zero through a control system. This counter-intuitive result can be attributed to the following two facts used above to derive Brosilow's criteria:

1. The uncertainty description (54) is *physically inconsistent.* Note that, for example,

$$\left\{G_{y_m^1 d}(I + w\Delta) : \Delta \in \mathbf{\Delta}\right\} \neq \left\{\begin{bmatrix} 1 & 0 \end{bmatrix} G_{y_m^6 d}(I + w\Delta) \begin{bmatrix} 1 \\ 0 \end{bmatrix} : \Delta \in \mathbf{\Delta}\right\} \tag{59}$$

   From a physical standpoint, the two sets must be the same, since adding or taking out a measurement should not affect the uncertainty associated with the subsystem that does not involve the added/subtracted measurement.

2. The particular choice of K (*i.e.*, $K(0) = Q_{\text{ls}}(I + G_{y_m u}(0)Q_{\text{ls}})^{-1}$) is in general not the best choice, since it does not consider the effect of uncertainty. The criterion depends explicitly on the assumption that such a controller is to be used.

Though the uncertainty description used to derive the upper bound on the worst-case error based on Brosilow's criteria is not the same as that used by Brosilow and coworkers, it can be shown that their uncertainty description is also physically inconsistent. Brosilow and coworkers also required the use of the least-squares controller, which can perform poorly under plant/model mismatch.

4.4 Application of Design-Independent Screening Tools

4.4.1 Physically Consistent Unstructured Output Uncertainty

First, we make the uncertainty description (54) physically consistent by modifying it as follows:

Uncertainty B: Unstructured Additive Output Uncertainty

$$\{G_{y_m d}\}_{\text{true}} = G_{y_m d} + w \begin{bmatrix} \delta_1 & 0 & 0 & 0 & 0 \\ 0 & \delta_3 & 0 & 0 & 0 \\ 0 & 0 & \delta_8 & 0 & 0 \\ 0 & 0 & 0 & \delta_{14} & 0 \\ 0 & 0 & 0 & 0 & \delta_{16} \end{bmatrix}^{\text{cond}} \Delta_{5\times 5} G_{y_m^{18} d} \tag{60}$$

where the $\delta_i = 1$ if i^{th} tray temperature measurement is included in y_m and 0 otherwise. The notation $[\cdot]^{\text{cond}}$ implies that the matrix is *condensed* meaning that rows containing only the zero elements are deleted. It is not our claim that the uncertainty description (60) is a physically meaningful one; we simply started from the uncertainty description that was used in deriving Brosilow's criteria in Section 4.2 and modified it such that it becomes physically consistent. We will introduce a more physically meaningful uncertainty description in a later section.

Because the SSV test for robust performance involves 2-block Δ ($\Delta_{5\times 5}$ and Δ_p), we can apply the General Screening Tool #3 proposed in Section 3.3. Since we are only concerned with steady state, the screening tool can be viewed as a necessary and sufficient condition for the existence of K satisfying a given worst-case closed-loop error bound on the output. Instead of simply checking if a specific worst-case error bound can be satisfied for each measurement set, we calculated its achievable worst-case error, that is the worst-case error under the "μ-optimal" controller expressed by

$$\min_K \max_{\Delta \in \mathbf{\Delta}} \bar{\sigma}(\mathcal{F}_{y_c d}(0)) \tag{61}$$

This can be easily done by multiplying $G_{y_c d}$ with a real positive scalar c_p and increasing it just enough such that the Screening Tool #2 be no longer satisfied. The achievable worst-case error

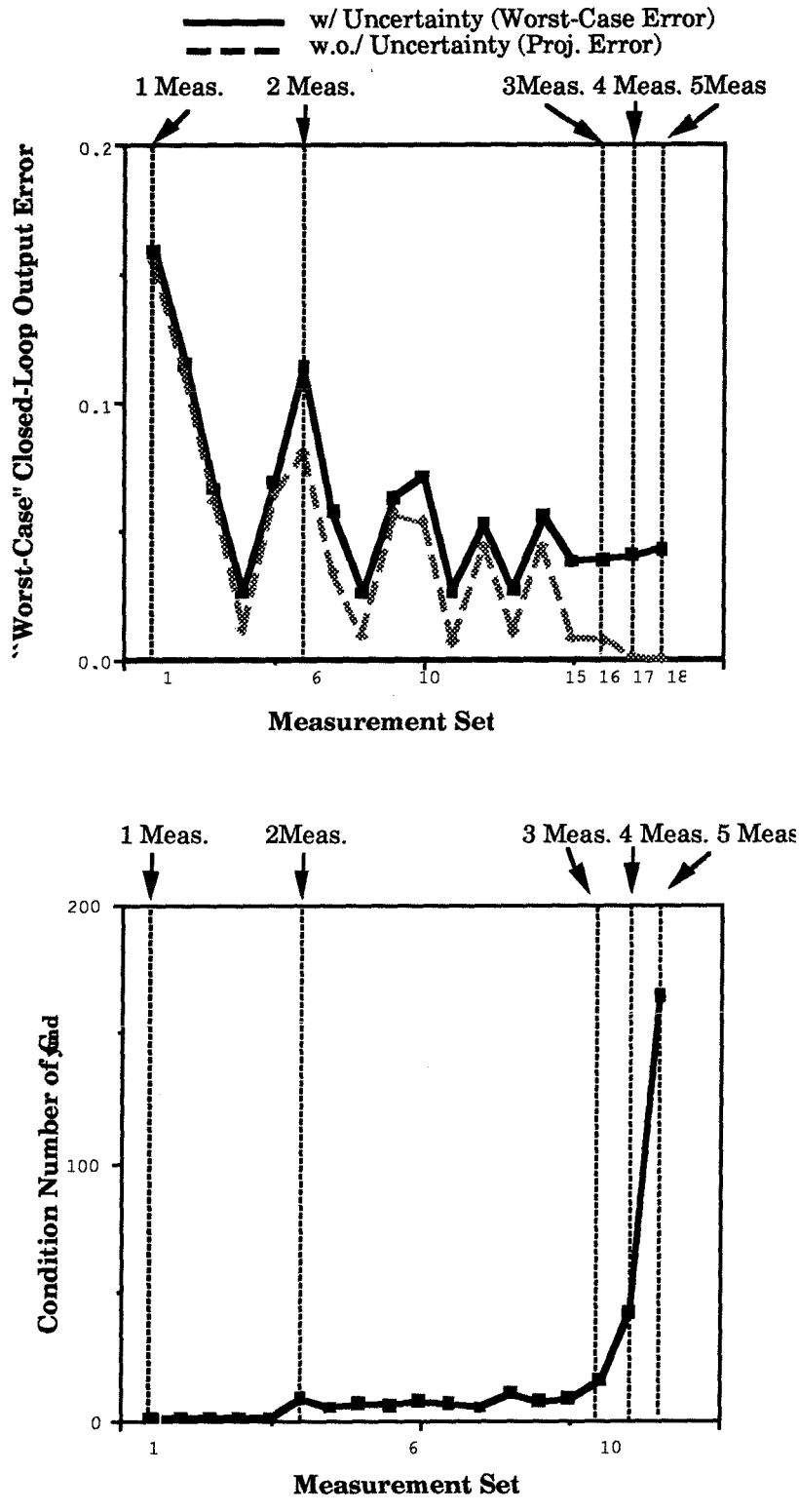

Figure 3: The 2-Norm of Worst-Case Steady-State Output Error, Projection Error and Condition Number of $G_{y_{md}}$ for Various Measurement Sets Under Uncertainty A and Least-Squares Controller

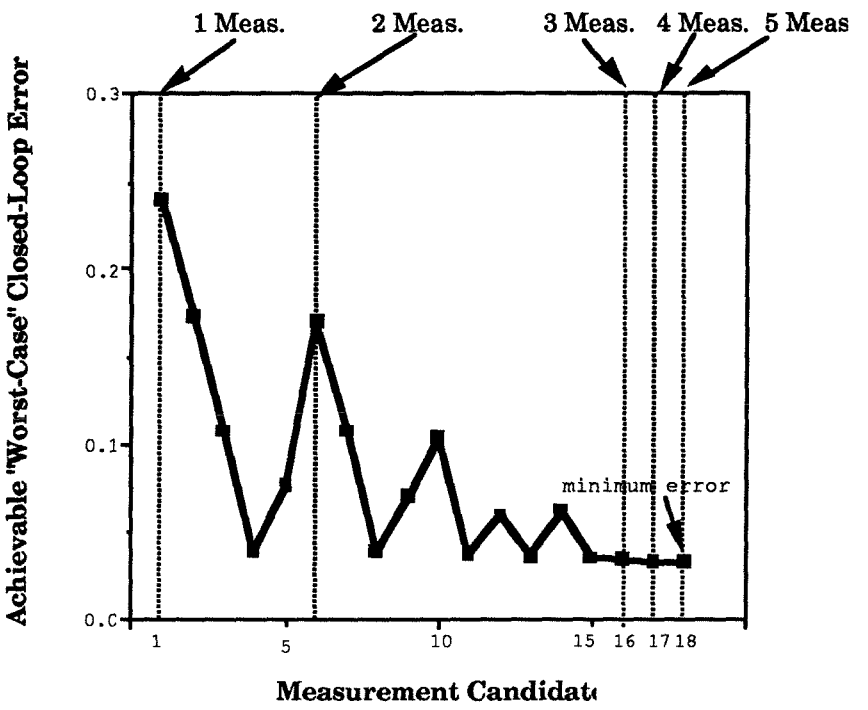

Figure 4: The 2-Norm of Worst-Case Steady-State Output Error for Various Measurement Sets Under Uncertainty B and "μ-Optimal" Controller

is the inverse of this particular value of c_p. The results are shown in Figure 4. Note that the achievable worst-case error decreases as more measurements are added which is consistent with our physical intuition. If the uncertainty description were indeed a physically meaningful one, the use of more than two measurements is hardly justified in this case.

Now we show that *either* of the two assumptions used to derive Brosilow's criteria leads to inconsistent selection criteria. Figure 5 shows the achievable worst-case closed-loop error for each measurement set when the physically inconsistent uncertainty description (54) is used. Figure 6 shows the worst-case closed-loop errors when the least-squares controller (55) is used along with the uncertainty description (60). Note that, in neither case, the worst-case closed-loop error decreases consistently as more measurements are added.

4.4.2 Structured Output Multiplicative Uncertainty

A more physically meaningful description of uncertainty on $G_{y_m d}$ may be as follows:

Uncertainty C : Structured Output Multiplicative Uncertainty

$$\{G_{y_m d}\}_{\text{true}} = \left(I + \begin{bmatrix} w_1 & & \\ & \ddots & \\ & & w_m \end{bmatrix} \begin{bmatrix} \Delta_1 & & \\ & \ddots & \\ & & \Delta_m \end{bmatrix} \right) G_{y_m d} \tag{62}$$

where Δ_i is a 1×1 norm-bounded block and m is the number of measurements in y_m. Hence, w_i can be viewed as a relative error on the ith measurement. Since the SSV test for robust performance

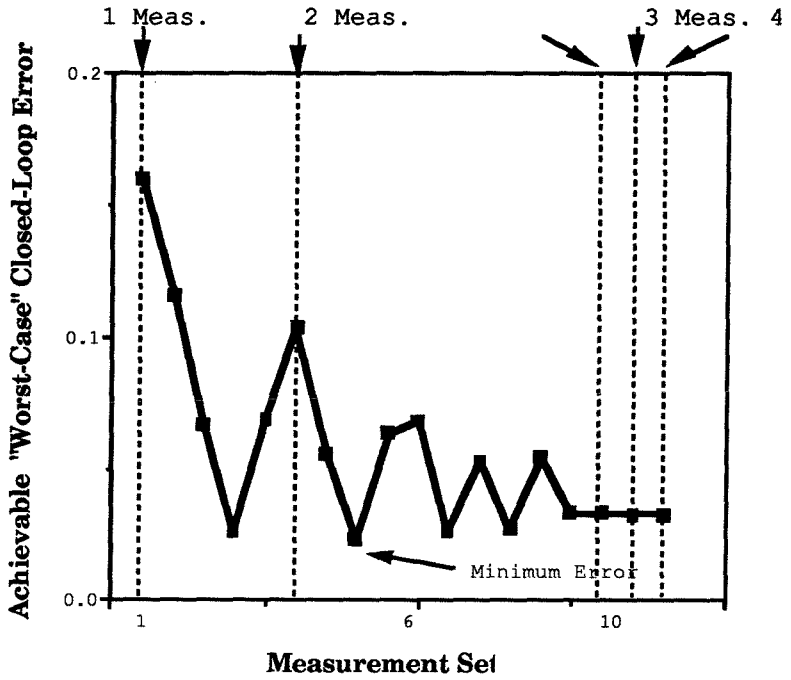

Figure 5: The 2-Norm of Worst-Case Steady-State Output Error for Various Measurement Sets Under Uncertainty A and "μ-Optimal" Controller

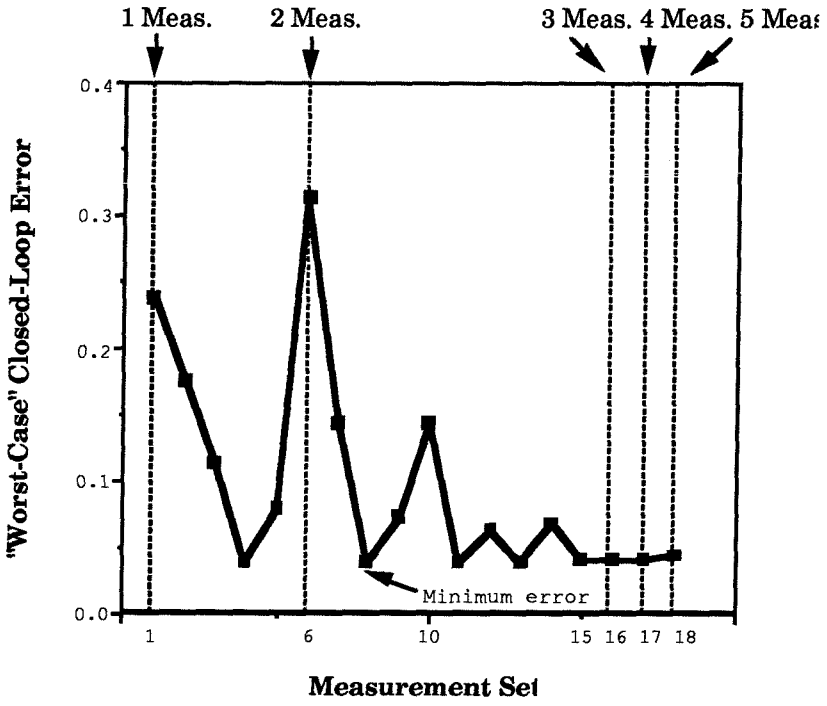

Figure 6: The 2-Norm of Worst-Case Steady-State Output Error for Various Measurement Sets Under Uncertainty B and Least-Squares Controller

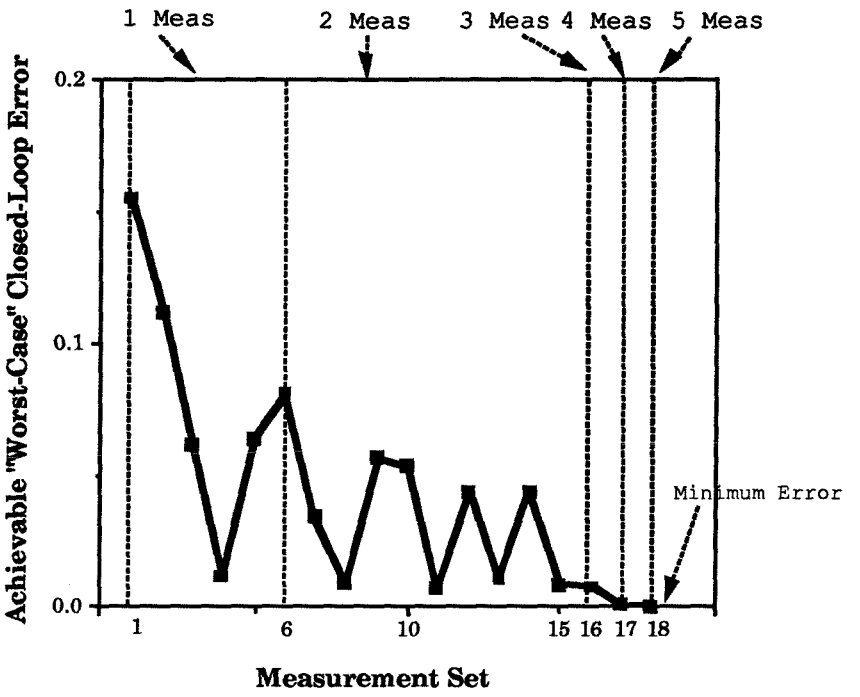

Figure 7: The 2-Norm of Worst-Case Steady-State Output Error for Various Measurement Sets Under Uncertainty C and "μ-Optimal" Controller under Full Control Assumption

now involves more than 2 blocks, we apply General Screening Tools #2. General Screening Tool #3 in general is not useful for evaluating measurement candidates (although it is useful for manipulated variable selection) since measurements have little effect on the closed-loop performance under the *full information* assumption. Again, instead of simply checking if the condition is satisfied for a specific error bound, we multiply $G_{y_c d}$ with an adjustable parameter c_p and increase it until the condition just fails. The inverse of this value of the parameter c_p for General Screening Tools #2 can be interpreted as the achievable worst-case closed-loop error when the full control assumption is made. The results are shown in Figure 7. The results are consistent with physical intuition as the achievable closed-loop error decreases as more measurements are added. In addition, in comparison with the projection error shown in Figure 3, we observe no difference. We conclude that, for this particular uncertainty structure, the full control assumption removes the effect of uncertainty on the achievable closed-loop performance.

5 Conclusion

A general framework is formulated for selecting actuators and sensors for control purposes. We proposed that a large number of control structure candidates arising from the combinatorial nature of the problem be reduced down to a manageable level through two-stage screening: *design-independent* screening that is independent of the controller design method and *design-dependent* screening which is tied to a specific type of controller design method. Design-independent screening tools are developed which can be calculated via convex optimization. The tools can be used to eliminate candidates for which no linear time-invariant controller exists satisfying a given H_∞ performance specification under structured uncertainty. The application of the screening tools to a

multi-component distillation column revealed some useful insights while previously existing criteria led to inconsistent results. Although we have not discussed design-dependent screening tools in this paper, several of such screening tools are discussed in Lee & Morari (1991a-b) and Braatz et al. (1993).

References

[1] Boyd, S. P. and C. H. Barratt (1987). *Linear Controller Design: Limits and Performance.* Prentice-Hall, Englewood-Cliff, NJ.

[2] Bristol, E. H. (1966). On a New Measure of Interactions for Multivariable Process Control, *IEEE Trans. Autom. Control*, **AC-11**, 133.

[3] Braatz, R. D., M. Morari, and J. Lee (1993). Control Structure Selection for Uncertain Systems: A Unified Review and New Results. in preparation.

[4] Brosilow, C. B. and M. Tong (1978). The Structure and Dynamics of Inferential Control Systems. *AIChE J.*, **24**, 492-500.

[5] Doyle, J. C. (1984). Lecture Notes in Advances in Multivariable Control. *ONR/Honeywell Workshop*, Minneapolis, MN.

[6] Doyle, J. C., K. Glover, P. Khargonekar and B. Francis (1989). State-Space Solution to Standard H_2 and H_∞ Control Problems. *IEEE Trans. Autom. Control*, **AC-34**, 831-846

[7] Francis, B. A. (1987). *A Course in H_∞ Control Theory.* Springer-Verlag, Heidelberg.

[8] Grosdidier, P. and M. Morari (1986). Interaction Measures for Systems Under Decentralized Control. *Automatica*, **22**, 309-319.

[9] Harris, T. J., J. F. MacGregor and J. D. Wright (1980). Optimal Sensor Location with an Application to a Packed-Bed Tubular Reactor. *AIChE J.*, **26 (6)**, 910-916.

[10] Joseph, B. and C. B. Brosilow (1978). Inferential Control of Processes. *AIChE J.*, **24**, 485-509.

[11] Kumar, S. and J. H. Seinfeld (1978a). Optimal Location of Measurements in Tubular Reactors. *Chem. Eng. Sci.*, **(33)**, 1507-1516.

[12] Kumar, S. and J. H. Seinfeld (1978b). Optimal Location of Measurements for Distributed Parameter System. *IEEE Trans. Autom. Control*, **AC-23**, 690 - 698.

[13] Lee, J. H. and M. Morari (1991a). Robust Measurement Selection. *Automatica*, **27** pp. 519-527.

[14] Lee, J. H. and M. Morari (1991b). Robust Control of Nonminimum-Phase Systems through the Use of Secondary Measurements: Inferential and Inferential Cascade Control. submitted to *Automatica.*

[15] Niederlinski, A. (1971). A Heuristic Approach to the Design of Linear Multivariable Interacting Control Systems, *Automatica*, **7**, 691.

[16] Packard, A. (1988). *What's New with μ?*, Ph.D. Thesis, University of California, Berkeley, CA.

[17] Skogestad, S., Morari, M. and J. C. Doyle (1988). Robust Control of Ill-Conditioned Plants: High Purity Distillation. *IEEE Trans. Autom. Control*, **AC-33** 1092-1105.

[18] Weber, R. and C. B. Brosilow (1972). Use of Secondary Measurements to Improve Control. *AIChE J.*, **18**, 614-623.

[19] Youla, D. C., J. J. Bongiorno and H. A. Jabr (1976a), Modern Wiener-Hopf Design of Optimal Controllers - Part I. The Single Input-Output Case. *IEEE Trans. Autom. Control*, **AC-21**, 23-13.

[20] Youla, D. C., H. A. Jabr and J. J. Bongiorno (1976b), Modern Wiener-Hopf Design of Optimal Controllers - Part II. The Multivariable Case. *IEEE Trans. Autom. Control*, **AC-21**, 319-338.

Appendix

Proof of Theorem 2

$$\inf_{Q\in\mathcal{C}^{r\times t}} \bar{\sigma}\left[D(R+UQV)D^{-1}\right] = \inf_{Q\in\mathcal{C}^{r\times t}} \bar{\sigma}\left[DRD^{-1}+(DU)Q(VD^{-1})\right] \tag{63}$$

We first make the terms pre- and post-multiplying Q unitary by replacing $Q \in \mathcal{C}^{r\times t}$ with $Q \in \left\{[(DU)^*(DU)]^{-1/2}\tilde{Q}[(VD^{-1})(VD^{-1})^*]^{-1/2} : \tilde{Q} \in \mathcal{C}^{r\times t}\right\}$. Then,

$$\inf_{Q\in\mathcal{C}^{r\times t}} \bar{\sigma}\left[D(R+UQV)D^{-1}\right] = \inf_{\tilde{Q}\in\mathcal{C}^{r\times t}} \bar{\sigma}\left(DRD^{-1}+\hat{U}\tilde{Q}\hat{V}\right) \tag{64}$$

where $\hat{U} = (DU)[(DU)^*(DU)]^{-1/2}$ and $\hat{V} = [(VD^{-1})(VD^{-1})^*]^{-1/2}(VD^{-1})$. We want to find $\hat{U}_\perp$ and $\hat{V}_\perp$ such that $\begin{bmatrix} \hat{U} & \hat{U}_\perp \end{bmatrix}$ and $\begin{bmatrix} \hat{V} \\ \hat{V}_\perp \end{bmatrix}$ are both unitary. Simple calculation shows that $\hat{U}_\perp = (D^*)^{-1}U_\perp(U_\perp^*(D^*D)^{-1}U_\perp)^{-1/2}$ and $\hat{V}_\perp = (V_\perp D^*DV_\perp^*)^{-1/2}V_\perp D^*$. Now

$$\begin{aligned}
\inf_{\tilde{Q}\in\mathcal{C}^{r\times t}} \bar{\sigma}\left(DRD^{-1}+\hat{U}\tilde{Q}\hat{V}\right) &= \inf_{\tilde{Q}\in\mathcal{C}^{r\times t}} \bar{\sigma}\left(DRD^{-1}+\begin{bmatrix} \hat{U} & \hat{U}_\perp \end{bmatrix}\begin{bmatrix} \tilde{Q} & 0 \\ 0 & 0 \end{bmatrix}\begin{bmatrix} \hat{V} \\ \hat{V}_\perp \end{bmatrix}\right) && (65)\\
&= \inf_{\tilde{Q}\in\mathcal{C}^{r\times t}} \bar{\sigma}\left(\begin{bmatrix} \hat{U} & \hat{U}_\perp \end{bmatrix}^* DRD^{-1}\begin{bmatrix} \hat{V} \\ \hat{V}_\perp \end{bmatrix}^* + \begin{bmatrix} \tilde{Q} & 0 \\ 0 & 0 \end{bmatrix}\right) && (66)\\
&= \inf_{\tilde{Q}\in\mathcal{C}^{r\times t}} \bar{\sigma}\left(\begin{bmatrix} \tilde{R}_{11}+\tilde{Q} & \tilde{R}_{12} \\ \tilde{R}_{21} & \tilde{R}_{22} \end{bmatrix}\right) && (67)
\end{aligned}$$

where $\tilde{R}_{11} = \hat{U}^*DRD^{-1}\hat{V}^*$, $\tilde{R}_{12} = \hat{U}^*DRD^{-1}\hat{V}_\perp^*$, $\tilde{R}_{21} = \hat{U}_\perp^*DRD^{-1}\hat{V}^*$, and $\tilde{R}_{22} = \hat{U}_\perp^*DRD^{-1}\hat{V}_\perp^*$. From Doyle (1984),

$$\inf_{\tilde{Q}\in\mathcal{C}^{r\times t}} \bar{\sigma}\left(\begin{bmatrix} \tilde{R}_{11}+\tilde{Q} & \tilde{R}_{12} \\ \tilde{R}_{21} & \tilde{R}_{22} \end{bmatrix}\right) = \max\left\{\bar{\sigma}\left(\begin{bmatrix} \tilde{R}_{21} & \tilde{R}_{22} \end{bmatrix}\right), \bar{\sigma}\left(\begin{bmatrix} \tilde{R}_{12} \\ \tilde{R}_{22} \end{bmatrix}\right)\right\} \tag{68}$$

Hence, the condition (33) is satisfied if and only if there exists $D \in \mathcal{D}_{rp}$ such that

$$\bar{\sigma}\left(\begin{bmatrix} \tilde{R}_{21} & \tilde{R}_{22} \end{bmatrix}\right) < \alpha \text{ and } \bar{\sigma}\left(\begin{bmatrix} \tilde{R}_{12} \\ \tilde{R}_{22} \end{bmatrix}\right) < \alpha \tag{69}$$

Now

$$\begin{aligned}
\bar{\sigma}\left(\begin{bmatrix} \tilde{R}_{21} & \tilde{R}_{22} \end{bmatrix}\right) &= \bar{\sigma}\left(\hat{U}_\perp^*DRD^{-1}\begin{bmatrix} \hat{V}^* & \hat{V}_\perp^* \end{bmatrix}\right) && (70)\\
&= \bar{\sigma}\left(\hat{U}_\perp^*DRD^{-1}\right) && (71)\\
&= \bar{\sigma}\left[\left((D^*)^{-1}U_\perp(U_\perp^*(D^*D)^{-1}U_\perp)^{-1/2}\right)^* DRD^{-1}\right] && (72)\\
&= \bar{\sigma}\left[\left(U_\perp^*(D^*D)^{-1}U_\perp\right)^{-1/2} U_\perp^*RD^{-1}\right] && (73)
\end{aligned}$$

Similarly, one can show that

$$\bar{\sigma}\left(\begin{bmatrix} \tilde{R}_{12} \\ \tilde{R}_{22} \end{bmatrix}\right) = \bar{\sigma}\left[DRV_\perp^*(V_\perp D^*DV_\perp^*)^{-1/2}\right] \tag{74}$$

Now

$$\bar{\sigma}\left[\left(U_\perp^*(D^*D)^{-1}U_\perp\right)^{-1/2}U_\perp RD^{-1}\right] < \alpha \tag{75}$$

$$\leftrightarrow \quad \lambda_{max}\left[\left(U_\perp^*(D^*D)^{-1}U_\perp\right)^{-1/2}U_\perp^* R(D^*D)^{-1}R^*U_\perp\left(U_\perp^*(D^*D)^{-1}U_\perp\right)^{-1/2} - \alpha^2 I\right] < 0$$

$$\leftrightarrow \quad \lambda_{max}[U_\perp^* R(D^*D)^{-1}R^*U_\perp - \alpha^2 U_\perp^*(D^*D)^{-1}U_\perp] < 0 \tag{76}$$

$$\leftrightarrow \quad \lambda_{max}[U_\perp^*\left(R(D^*D)^{-1}R^* - \alpha^2(D^*D)^{-1}\right)U_\perp] < 0 \tag{77}$$

Likewise,

$$\bar{\sigma}\left[DRV_\perp^*(V_\perp D^*DV_\perp^*)^{-1/2}\right] < \alpha \leftrightarrow \lambda_{max}[V_\perp\left(R^*(D^*D)^{-1}R - \alpha^2(D^*D)^{-1}\right)V_\perp^*] < 0 \tag{78}$$

Defining $X = D^*D$ completes the proof. QED.