Air-Bearing Maxwell Top

H. V. NEHER
California Institute of Technology, Pasadena, California

(Received March 3, 1962)

The Maxwell top herein described is suitable for use in a student laboratory. With it, measurements may be made on angular acceleration and precessional motion. Over a wide range of angular speeds, friction is too small to affect the measurements. The precision attainable is limited primarily by the patience and skill of the experimenter.

A. INTRODUCTION

THE apparatus used in introductory laboratories to study accelerated angular motion is usually subject to appreciable frictional forces and while corrections may be made to account for such forces, these are sometimes uncertain. Also, the method of applying torques is often cumbersome. Furthermore, there does not seem to be readily available an apparatus with which quantitative measurements may be made on gyroscopic action.

The apparatus to be described has no measurable friction over a wide range of angular velocity. An integral part of the apparatus is a controllable driving torque which is independent of the speed. Quantitative measurements may be made not only on accelerated angular motion but also on precession. At slow angular speeds nutation may also be studied.

B. DESCRIPTION

A drawing to depict the main construction of the top is shown in Fig. 1. The 2-in.-diam bronze ball floats on an air pad. Details of this are given in Fig. 2. The air that goes downward along the air pad may either escape through the exhaust or go upward through the center of the ball and thence outward to escape through small holes which direct the air tangentially, thus providing a driving torque. The amount of driving torque is controlled by means of the exhaust valve. An important feature of the torque, due to this Hero's engine type of drive, is that it is independent of the speed of the top.

The top is so constructed that its center-of-mass is below the center of the ball so that it is stable when stationary and the air is turned on. A mass, which slides along the stem of the top, allows the resultant center-of-mass to be shifted. It is conveneint to have the top become unstable when this sliding mass is near the upper part of the stem. When the resultant center-of-mass is just at the center of the ball, no precession will occur when the top spins. It precesses in one

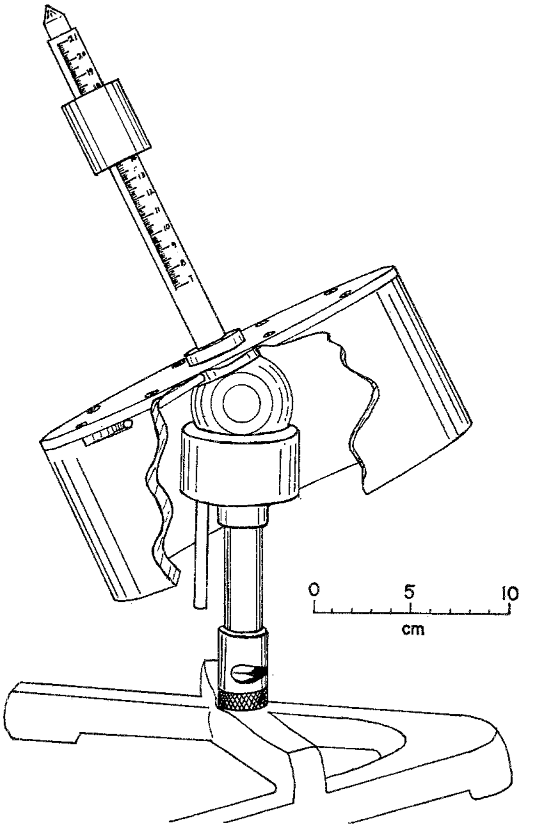

FIG. 1. The top is supported by the 2-in.-diam bronze ball which floats on an air pad. The graduated stem screws into the ball, thus fastening the main parts rigidly together. Air from the pad may either escape downward through the hollow support or pass upward through that part of the stem that screws into the ball. Two tubes, just under the top plate of the top, lead the air radially outward to holes which direct the escaping air tangentially. This arrangement provides a constant driving torque for a given air pressure, which is easily controlled.

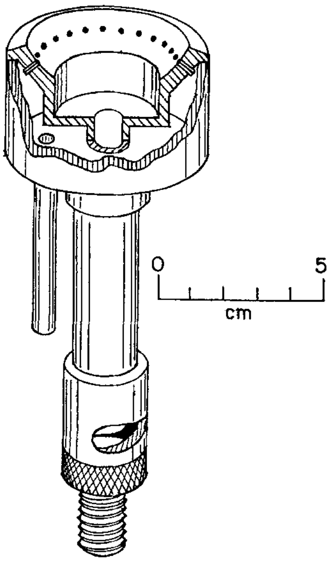

FIG. 2. The air pad has 24 inserts by means of which air is taken from the common manifold to the curved surface on which the 2-in. bronze ball floats.

direction when the sliding mass is below this point and in the other direction when the mass is above this point. By adjusting the position of the slider for no precession the location of the center-of-mass of the top alone may be accurately determined.

In machining, care should be used in turning the cylinder which forms the main body of the top. Even so it will probably be necessary to balance the top after assembly. This is best done by floating the top on the air pad, sliding the weight until it is just below the point where instability occurs, then adding or removing mass from the appropriate place on the cylinder until the stem stands vertically.

The radius of curvature of the air pad should be the same as that of the ball. Thus, for final finishing, the ball may be lapped into the pad using 300 to 500 per inch mesh compound.

The air on which the ball floats emerges through a series of equally spaced small holes located around the center line of the curved surface. The tops we have made have 24 such holes. These holes are 0.006-in. in diameter and are made as follows: Commercial stainless steel tubing with an outside diameter of $\frac{1}{16}$ in. and with a 0.006-in. hole is cut into lengths $\frac{3}{16}$ in. long. These inserts are then forced into the series of 24 $\frac{1}{16}$-in. holes, thus extending into the circular manifold as shown in Fig. 2.

To insure for the jets at the rim a supply of air that is sufficient to provide the desired driving torque, one or more small holes may be drilled into the manifold just below the curved surface (a No. 70 drill may be used).

To control the exhaust air, and thus the driving torque, a knurled sleeve with a tapered hole fits over the exhaust hole in the lower part of the support. By rotating this sleeve the speed, as observed with a stroboscope, may be kept constant.

It is convenient to have a centimeter scale on the stem. This may be put on with a milling machine. It is also desirable to have the scale start numbering from the center of the ball.

C. AUXILIARY EQUIPMENT

To determine the torque due to the air jets, a spring balance is convenient. This is shown in Fig. 3. The horizontal frame is made of sheet metal with the sides bent up for strength as well as for protecting the delicate spring from mishap. At the bottom of the trough are located a mirror and scale. The length is about 30 cm so that the spring may be extended some 25 cm. The helical spring is wound of 0.005-in.-diam steel piano wire on a mandrel of diameter 0.105 in. If a length of about 3 cm of such a close-wound spring is chosen, a force of about 0.1 N is required to

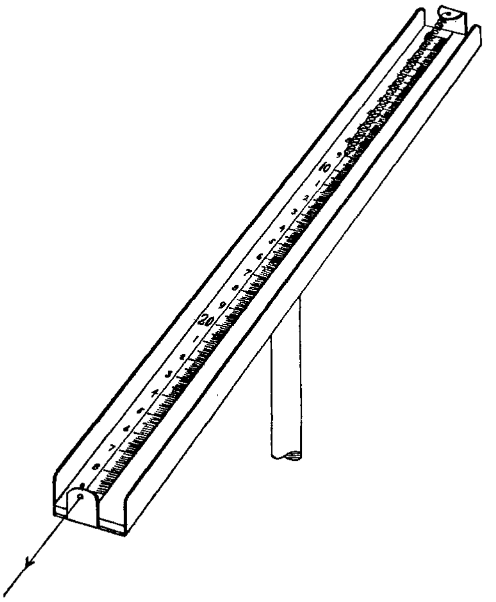

FIG. 3. This spring scale is used to measure the force due to the air jets on the circumference of the top. A force of 0.1 N extends the spring about 20 cm.

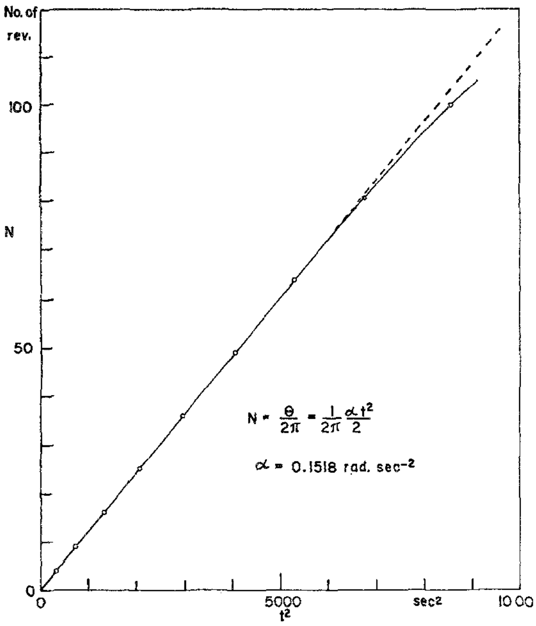

FIG. 4. Up to speeds of several rps, the angular acceleration of the top is constant for a given air pressure to the driving jets.

stretch the spring the full distance allowed and this is about the force produced by the driving jets (with jet holes 0.045 in. in diameter).

To determine the moment of inertia of the top, a hollow cylinder like that used for the skirt of the top is used. A $\frac{1}{8}$-in.-diam drill rod, 3 ft long, having a bushing on its lower end that screws into the stem and a suitable piece for clamping fastened to its upper end, is used as a torsion rod. The auxiliary cylinder, whose moment of inertia is readily computed, is added to the top in the usual way to arrive at the moment of inertia of the top.

It is desirable also to provide a movable pointer held by suitable clamp and stand to note the exact times when an integral number of precessions occur. The location of the end of the stem on the top may be determined precisely by means of a short, pointed rod that screws into the stem.

To determine the speed of the top a good stroboscope is desirable. However, one may also use a lamp flashing at, say, a rate of 60 times a second and use some submultiple of revolutions of the top, since the speed of the top is easily controlled. In one of the examples cited below, a lamp flashing 60 times a second was used, and the top was held at 10 rps.

An air supply of about 60 psi is required with suitable valve for control. The control is necessary in order to keep the air pressure at the top constant when accelerations are being determined.

D. SAMPLE DATA

1. Determination of moment of inertia of top:

Mass of top, M	6.010 ±0.001 kg
Mass of auxiliary ring	4.783 ±0.001 kg
Period of oscillation of top suspended on torsion wire, without ring	1.3473 ±0.0005 sec
Same with ring added	1.8805 ±0.0005 sec
Moment of inertia of ring (calculated from mass and dimensions)	0.04385±0.00005 kg m^2
Moment of inertia of top, I	0.04620±0.00005 kg m^2

2. Acceleration of the top:

Force due to air jets (found from calibrated spring balance)	0.0700 ±0.0005 N
Torque due to air jets	0.00715±0.00005 N m
Angular acceleration calculated	0.1538 ±0.0012 rad sec^{-2}
Angular acceleration measured[1]	0.1518 ±0.0010 rad sec^{-2}

3. Precessional rate of the top:

For no precession, center-of-mass of slider was	0.1644 ±0.0002 m above center of ball
Mass of slider	0.2204 ±0.0001 kg
Distance of center-of-mass of top below center-of-mass of ball h	0.00603±0.00001 m
Rotational speed, n (trial 1)	6.000 ±0.001 rev sec^{-1}
Computed time to precess 1 rotation[2]	30.85 ±0.07 sec
Measured time	30.88 ±0.05 sec
Rotational speed, n (trial 2)	10.000 ±0.001 rev sec^{-1}
Computed time to precess 1 rotation[2]	51.45 ±0.10 sec
Measured time	51.45 ±0.05 sec

[1] The angular acceleration was calculated from the time required to go a number of full revolutions, assuming it to be constant. Thus the times required to go 1, 4, 9, 16 ⋯ n^2 revolutions, starting each time from the stationary state, were determined. The air pressure to the top was kept constant for each run. The results are plotted in Fig. 4. The straight line up to several rps justifies the assumption of constant acceleration. Air friction probably accounts for the departure of the experimental points from a straight line at the higher speeds.

[2] The time to precess one rotation is calculated from the usual formula, $T = 4\pi^2 nI/Mgh$, where the quantities have the meaning given in the above table of data.

It will be noted that considerable precision is attainable with this apparatus. In fact, there appears to be no inherent reason why the rate of precession cannot be checked experimentally with any degree of precision that may be desired since there appear to be no effects of friction and all quantities may be determined accurately.

ACKNOWLEDGMENTS

The author wishes to thank the shop men who so skillfully fabricated these tops. He also wishes to express his appreciation to Professor R. B. Leighton for some useful suggestions as to how best to arrive at a satisfactory mechanical design.

Simplification of Carathéodory's Treatment of Thermodynamics. II*

Louis A. Turner
Argonne National Laboratory, Argonne, Illinois

The simplified treatment can be based on the assumptions as to continuity made by Carathéodory. Although Landsberg is correct that the general conclusion that the change of entropy must always have the same sign involves a further unstated assumption, it does follow without further assumption that the change of entropy must have the same sign in all adiabatic changes away from initial states having the same entropy. The results for ordinary systems, however, remain the same.

1. INTRODUCTION

In a recent paper P. T. Landsberg[1] has discussed simplifications of Carathéodory's development of thermodynamics, which were suggested in papers by Buchdahl[2] and by the present author.[3] This latter paper will be referred to in what follows as I. Landsberg's main point is that both of these papers, and also Carathéodory's original one, appear to involve implicit continuity assumptions which one cannot infer unambiguously from the papers. His point is well taken. The purpose of this paper is to round out I by discussing explicitly the continuity assumptions which need to be made. The principal conclusions are: (1) The part of the simplified argument which was put forth in I as an alternative to Carathéodory's use of a special theorem can be based on precisely the continuity assumptions which were made by Carathéodory; and (2) Landsberg is correct in pointing out that both Carathéodory's conclusion that the entropy must either never decrease or never increase and the similar conclusion of I with respect to changes of x_0 do imply some unstated assumption. An approach to this problem differing somewhat from Landsberg's is suggested.

2. COMPOUND ADIABATIC PROCESSES

Before the discussion of the main topics it seems desirable to mention briefly a point which is involved in I but not in Carathéodory's development. It is the idea that one possible adiabatic process for putting a system into a neighboring state is to change it first to a different remote state by a reversible adiabatic process and then bring it back to a configuration close to that of the original state by a suitable irreversible adiabatic process. This is a special case of the general proposition that a sequence of two or more adiabatic processes constitutes an adiabatic process over-all, or as Landsberg puts it, "if B is adiabatically accessible from A, and C is also adiabatically accessible from B, then C is also adiabatically accessible from A." Landsberg believes that for his way of developing the theory this condition "ought to be imposed explicitly." I disagree. I believe that the proposition need not be imposed explicitly in any discussion of adiabatic processes since it is an immediate and inescapable corollary of the very definition of an adiabatic process. The definition requires only

---

* Work performed under the auspices of the U.S. Atomic Energy Commission.

[1] P. T. Landsberg, Physica Status Solidi 1, 120 (1961).

[2] H. A. Buchdahl, Z. Physik 152, 425 (1958); Am. J. Phys. 28, 196 (1960).

[3] L. A. Turner, Am. J. Phys. 28, 781 (1960).