PHYSICAL REVIEW D VOLUME 11, NUMBER 6 15 MARCH 1975

Violations of Bjorken scaling in inclusive e^+e^- annihilation*

Curtis G. Callan, Jr. and M. L. Goldberger
Joseph Henry Laboratories, Princeton University, Princeton, New Jersey 08540
(Received 26 September 1974)

We discuss the application of renormalization-group techniques to inclusive e^+e^- annihilation. It is shown by a modest extension of Mueller's techniques that annihilation structure functions have a behavior completely analogous to electroproduction structure functions: Their moments scale for large virtual photon mass, and this scaling is described by "anomalous dimensions" which have a singularity structure and general form very similar to the usual anomalous dimension, though there is no simple relation between the two. We show how information about the structure functions can be deduced from the moments and how, in appropriate limits, deviations from Bjorken scaling can be interpreted in terms of an underlying field theory.

I. INTRODUCTION

In recent years we have learned that *if* the underlying physics of the elementary-particle world is correctly described by renormalizable quantum field theory, there are theory-dependent consequences for the asymptotic behavior of cross sections of the electroproduction type (deep-inelastic electron scattering). These consequences are most precisely predictable in asymptotically free theories and, for such theories, seem to be qualitatively consistent with the observed scaling behavior. Within the framework of quantum field theory, however, (Bjorken) scaling can be only an approximate phenomenon. It has been pointed out by Parisi[1] and Gross[2] that the nature of *violations* of scaling provides a strong test of the underlying field theory. Although there are some indications of deviations from exact scaling in deep-inelastic electron and muon scattering at the highest energies and momentum transfers, at present there are insufficient data to confront the theory (at least in those regimes where the theory can be trusted).

Electron-positron annihilation is very closely related to electroproduction: The cross section for the process $e+\bar{e}\to A$ +unobserved hadrons is just a continuation from the spacelike to the timelike region of the virtual-photon momentum, q, for the electroproduction cross section $e+\bar{A}\to e$ +unobserved hadrons ($\bar{A}$ is the antiparticle of A). One might hope, therefore, to be able to discuss the nature of scaling violations in inclusive $e\bar{e}$ annihilation in a manner analogous to the electroproduction process. This problem is particularly acute since present experiments[3] already show that scaling violations are embarrassingly easy to find.

Now, electroproduction is described theoretically in terms of the product of two local electromagnetic current operators; the techniques of operator-product expansions plus the renormalization group[4] provide the key to the analysis. Unfortunately, the annihilation process cannot be described in terms of the product of two local operators, so that a critical part of the technology is denied us. Recently Mueller[5] has shown how to circumvent this problem. We have been able to simplify Mueller's treatment in a way which reveals the almost complete identity between the scaling behavior of electroproduction and annihilation. We are then able to discuss the inclusive annihilation cross section in (a) the limit of large q^2 and fixed center-of-mass energy E of the detected hadron, and (b) the limit of large q^2 and fixed $\omega=2E/(q^2)^{1/2}$. These two limits are essentially completely determined by the underlying theory. As we shall see they are of considerable phenomenological interest, especially (a).

We present our results as follows: In an appendix we describe our "improved" renormalization-group treatment of the scaling behavior of the moments of the annihilation structure functions (we use the terms cross sections and structure functions interchangeably). Although this step is critical for our whole discussion, it is sufficiently technical to warrant consignment to an appendix. In Sec. II we describe the general behavior of moments which emerges from the results of the appendix. In Sec. III we show how the moments can be used to discuss the annihilation cross section, and we present two asymptotic limits in which dramatic and characteristic violations of scaling occur.

II. REVIEW OF THE GENERAL PICTURE

We consider the inclusive cross section for producing a particle of momentum p and type a plus unobserved hadrons from a virtual (timelike) pho-

ton of momentum q. (In discussing $e\bar{e}$ annihilation we consider only the conventional one-photon exchange mechanism.) The photon and the observed hadron in general have spin, and there are a number of independent cross sections. We shall generally ignore this complication (except where it is essential) and treat all particles as spinless. The generic cross section will be written as $A_a(q,p)$ or $A_a(q^2,\omega)$, where $\omega = 2p\cdot q/q^2$. Note that $s=(q-p)^2$ is the mass squared of the unobserved hadrons and ω ranges from 0 to 1; the latter value corresponding to the threshold where the unobserved hadrons consist, in fact, of a single one just like the detected one.

Just as in the electroproduction case, it is necessary to form the moments, $M_n^a(q^2)$, of the cross section,

$$M_n^a(q^2) = \int_0^1 d\omega\, \omega^n A_a(q^2,\omega)\,, \tag{2.1}$$

in order to find simple large-q^2 behavior. If one computes this asymptotic behavior by dropping inverse powers of q^2 and keeping factors of $\ln q^2$, to any finite order of perturbation theory one expects to find

$$M_n^a \to \sum_i C_n^i(q^2)\Gamma_a^{n,i}\,, \tag{2.2}$$

and the C_i^n satisfying

$$-q^2\frac{\partial}{\partial q^2}C_n^i(q^2) = \sum_j \gamma_n^{ij}C_n^j(q^2)\,. \tag{2.3}$$

Thus the C_n^i behave as sums of powers of $(q^2)^{-1}$ with the powers being the eigenvalues of the matrix γ_n^{ij}. The C_n^i are universal functions which govern the cross section for producing any type of particle (analogous to the c-number coefficients in the operator-product expansion). The number of independent C_n^i's is governed by the field content of the theory; it is basically the same as the number of independent twist-2 operators of a given spin. The $\Gamma_a^{n,i}$ are kinematically similar to the matrix element of the operator of type i in the state a. As Mueller[5] emphasizes it is *not* the matrix element of any local operator. Finally, the γ_n^{ij} are the elements of an anomalous-dimension matrix evaluated at the renormalization-group fixed point; this matrix can be computed order by order in perturbation theory by a variety of techniques. In an asymptotically free theory[7] we would expect, in the usual way, to modify this picture only by replacing Eq. (2.3) by

$$-\ln q^2\frac{\partial}{\partial \ln q^2}C_n^i = \sum_j \bar{\gamma}_n^{ij}C_n^j\,, \tag{2.4}$$

where now $\bar{\gamma}_n^{ij}$ can be taken to be just the first term in the perturbation expansion of γ_n^{ij}. The C_n^i will behave asymptotically as a sum of powers of $(\ln q^2)^{-1}$, the powers being just the eigenvalues of $\bar{\gamma}_n^{ij}$. In short, with slight changes of terminology, we expect the moment behavior we are accustomed to in electroproduction to carry over to inclusive annihilation. There are some inherent simplicities in the annihilation regime in that one can explore exotic channels without requiring the exotic targets that would be needed in electroproduction. In a theory with underlying fields of maximum isospin $\frac{1}{2}$, there is no twist-2 operator with isospin 2. Consequently a $\Delta I=2$ annihilation cross section such as $A_{\pi^+}-A_{\pi^0}$ would be expected to vanish as an inverse power of q^2.

Mueller's work plus the arguments presented in the Appendix suffice to justify the above picture for theories involving only scalar fields. No difficulties of principle arise in extending it to theories involving both scalar and spinor fields. Vector mesons, however, cause serious problems. The key to Mueller's treatment of annihilation[5] (and electroproduction, for that matter) is an integral equation for the inclusive cross section in terms of a two-particle irreducible kernel. Non-vector-meson theories have tame infrared behavior, and it is possible to argue that the kernel has no infrared singularities in the zero-mass limit. This means that the infrared singularities responsible for the nontrivial asymptotic behavior of the cross-section moments are controlled by the topological structure of the integral equation. Unfortunately, with vector mesons, the infrared behavior is no longer tame—the zero mass S matrix does not exist. The same integral equation can be written for the cross section, but the irreducible kernel no longer has a finite zero-mass limit. The asymptotic behavior of the moments is now governed by an inextricable mixture of the zero-mass singularities of the kernel and the singularities generated by the integral equation.

This means not necessarily that the basic scaling result is wrong for vector mesons, but that the integral-equation technique is not powerful enough to prove it. In fact, low-order perturbation calculations[6] show that as long as we compute *physical* cross sections (which means principally that the observed hadron, if charged, must be on the mass shell), the leading large-q^2 behavior of the moments is governed by precisely the same renormalization-group equation as before. We shall conjecture that this is true to all orders, although we have not yet been able to prove it. This is not completely reckless since the problem encountered in the integral-equation approach is the same in both annihilation and electroproduction, and for the latter we can *prove* (via the operator-product expansion) that the proposed asymptotic behavior is

indeed true.

Our conjecture about vector-meson theories means that we can study asymptotically free theories, probably the most interesting of all the renormalizable theories. Furthermore, since the leading large-q^2 behavior is governed by the lowest-order contribution to γ_n, we can use perturbation theory to say something useful about the full theory. This is to be contrasted with non-asymptotically free theories where knowledge of γ_n to all orders is usually needed to say anything useful. An exception to this is in the region of large n since we can deduce the behavior quite generally.

As a specific model for subsequent discussion we consider a theory of fermions and vector mesons with gauge group, G, the fermions in a representation, R, and with a global SU(3) symmetry group carried only by the fermions. The counting of the independent functions C_n^i proceeds as in electroproduction: There are two functions corresponding to the spinor-field operator structure $\bar{\psi}\psi$, one a singlet with respect to SU(3) and one an octet; there is one function corresponding to the vector-field operator structure $F_{\mu\nu}F^{\mu\nu}$ which is automatically an SU(3) singlet. We call the functions C_n^8 (the octet) and C_n^F, C_n^V (singlets). C_n^8 mixes with nothing and so has a simple anomalous dimension γ_n^8. The singlet functions C_n^F and C_n^V may mix with one another and this is described by an anomalous dimension matrix

$$(\bar{\gamma}_n^{\text{sing}})^{ij} \equiv \begin{pmatrix} \bar{\gamma}_n^{FF} & \bar{\gamma}_n^{FV} \\ \bar{\gamma}_n^{VF} & \bar{\gamma}_n^{VV} \end{pmatrix} ;$$

since the leading asymptotic behavior of the cross section is governed by the lowest-order contribution to the anomalous dimension, an easy way to determine $\bar{\gamma}_n^8$, etc., is to compute all the independent cross sections (i.e., for producing an observed fermion *or* an observed vector meson) in lowest nontrivial order and identify the γ's as the coefficient of the logarithmic growth of the cross section. This yields the following results:

$$\bar{\gamma}_n^8 = C_2(R)\left(-3 - \frac{2}{n(n+1)} + 4[\psi(n+1) - \psi(1)]\right), \tag{2.5}$$

and the elements of the singlet matrix

$$\bar{\gamma}_n^{FF} = C_2(R)\left(-3 - \frac{2}{n(n+1)} + 4[\psi(n+1) - \psi(1)]\right),$$

$$\bar{\gamma}_n^{VV} = C_2(G)\left(\frac{1}{3} - \frac{4}{(n-1)n} - \frac{4}{(n+1)(n+2)} + 4[\psi(n+1) - \psi(1) - 1]\right) + \tfrac{4}{3}T(R),$$

$$\bar{\gamma}_n^{VF} = -4T(R)\left(\frac{n^2+n+2}{n(n+1)(n+2)}\right), \tag{2.6}$$

$$\bar{\gamma}_n^{FV} = -2C_2(R)\left(\frac{n^2+n+2}{n(n-1)(n+1)}\right),$$

where $C_2(R)$, $C_2(G)$, and $T(R)$ are the Casimir operators for the gauge group as defined by Gross and Wilczek.[8] The quantity $\psi(x)$ is the logarithmic derivative of the gamma function $\Gamma(x)$, and

$$\psi(n+1) - \psi(1) = \sum_{j=1}^{n} (1/j);$$

ψ can be defined for complex arguments by an integral representation with the properties

$$\psi(x) \sim -\frac{1}{x+n} \text{ as } x \to -n, \quad n \text{ integral}$$

$$\lim_{n\to\infty} \psi(x+n) = \ln n + O\left(\frac{1}{n}\right).$$

The details of the $\bar{\gamma}_n$'s are not essential for us; what we shall use is their behavior for large n as well as the location of their singularities. We recall that to study the scaling behavior for the singlet moments for large $\ln q^2$ we must find the smallest eigenvalue of $(\bar{\gamma}_n^{\text{sing}})$.

With this general background and an example of a typical theory, we turn to the question of violations of simple Bjorken scaling.

III. APPLICATIONS

To discuss violations of scaling most directly it is useful to convert the information we have on the structure-function moments into a statement about the structure functions itself. We shall follow the procedure of Gross,[2] starting with the expression of the cross section in terms of its moments:

$$A(\omega, q^2) = \int_{c-i\infty}^{c+i\infty} \frac{d\sigma}{2\pi i}\, \omega^{-\sigma-1} M(\sigma, q^2), \tag{3.1}$$

where we have dropped the subscript a introduced in Eq. (2.1). We have also used Eq. (2.1) to extend the quantity $M_n(q^2)$ to a function of a complex variable σ defined as an analytic function $M(q^2,\sigma)$ in the half-plane $\mathrm{Re}\,\sigma > \sigma_0$, the location of σ_0 being governed by the behavior of $A(\omega, q^2)$ near $\omega = 0$. Finally, the quantity c is greater than σ_0, the right-most singularity of $M(q^2,\sigma)$. So far, of course, we have merely written a formal Mellin-transform relationship and there is no physics involved. Now, however, we imagine q^2 large enough (say, $q^2 > q_0^2 \gg 1\ \text{GeV}^2$) that the asymptotic behavior of the moments has set in, so that we may write

$$A(\omega, q^2) = \int_{c-i\infty}^{c+i\infty} \frac{d\sigma}{2\pi i}\, \omega^{-\sigma-1} \left(\frac{q^2}{q_0^2}\right)^{-\gamma(\sigma)} M(\sigma, q_0^2) \tag{3.2}$$

for non-asymptotically free theories, or

$$A(\omega,q^2)=\int_{c-i\infty}^{c+i\infty}\frac{d\sigma}{2\pi i}\,\omega^{-\sigma-1}\left(\frac{\ln q^2}{\ln q_0^{\,2}}\right)^{-\bar{\gamma}(\sigma)}M(\sigma,q_0^{\,2})\tag{3.3}$$

for asymptotically free theories. The "anomalous dimensions" $\gamma(\sigma)$ and $\bar{\gamma}(\sigma)$ are the quantities defined in Eqs. (2.2), (2.3) and were discussed in detail in Sec. II. (For ease of writing we imagine there to be only a single quantity γ involved; a sum over the eigenvalues of the γ matrix would be handled in an obvious way.) The quantity $M(\sigma,q_0^{\,2})$ is, of course, not known *a priori* and must be regarded as initial data. Our purpose is to find properties of $A(\omega,q^2)$ which depend only on $\gamma(\sigma)$ and not on the theoretically inaccessible $M(\sigma,q_0^{\,2})$.

There is a very important point to be kept in mind here: The contour integral involved in the reconstruction of $A(\omega,q^2)$ from $M(\sigma,q^2)$, Eq. (3.1), of course involves all values of σ; in asserting that the large-q^2 behavior of A can be found by replacing $M(\sigma,q^2)$ by the values dictated by our renormalization-group analysis, Eqs. (3.2) and (3.3), we are claiming that *the approach of* $M(\sigma,q^2)$ *to its asymptotic form is uniform in* σ [at least over the range of σ that contributes significantly to $A(\omega,q^2)$]. This is a reasonable assumption for $\omega\neq 1$ since the range in σ which contributes to the integral is of the order $|\sigma|\sim 1/\ln(\omega^{-1})=(1-\omega)^{-1}$ near $\omega=1$. It is evidently very dangerous to assume uniformity if we are interested in $A(\omega\simeq 1,q^2)$ (as we are when we attempt to extract the contribution of elastic or resonance form factors) since the integral is then sensitive to arbitrarily large values of σ. In fact, it is very easy to find examples where the limit is *not* uniform. In massive QED, for example, the first nontrivial contribution to the cross section has corrections to the leading asymptotic behavior of $M(\sigma,q^2)$ which are of order $\sigma m^2/q^2$ and are not negligible for $\sigma>q^2/m^2$ or in other words for $1-\omega<m^2/q^2$. This strongly suggests that it is incorrect to exploit the asymptotic formula, Eq. (3.3), to study the elastic and resonance form-factor region. With this nonuniformity caveat in mind, we proceed now to discuss some interesting physical limits of the annihilation cross section.

In non-asymptotically free theories, as we have already mentioned, the only reliable feature of the anomalous dimension is its large-n behavior. As will be shown in the Appendix, $\gamma(n)\to\text{const}-O(n^{-2},n^{-1})$ in scalar (Yukawa) theories. We shall show that the large-q^2 fixed-ω behavior of the cross section is governed by the large-n dependence of γ, and thus this one reliable feature of γ has observable consequences.

We rewrite Eq. (3.2) as

$$\omega A(\omega,q^2)=\Phi(\eta,\xi)=\int_{c-i\infty}^{c+i\infty}\frac{d\sigma}{2\pi i}\,C(\sigma)e^{\sigma\eta-\xi\gamma(\sigma)},$$

where

$$\eta=-\ln\omega,\quad \xi=\ln(q^2/q_0^{\,2}),\quad C(\sigma)=M(\sigma,q_0^{\,2}).$$

The only thing we know about $C(\sigma)$ is that its large-σ behavior is controlled by the way $A(\omega,q^2)$ behaves as $\omega\to 1$. If $A\sim(1-\omega)^p$, then $C(\sigma)\to\sigma^{-p-1}$ for large σ. Consider now the limit of $\xi\to\infty$ and η finite. There will in general be a saddle point on the real σ axis at $\sigma=\sigma_0$ where $\gamma'(\sigma_0)=\eta/\xi$, and the standard evaluation gives

$$\Phi(\eta,\xi)=\frac{C(\sigma_0)}{[-2\pi\gamma''(\sigma_0)\xi]^{1/2}}\times\exp[\sigma_0\eta-\gamma(\sigma_0)\xi][1+O(1/\xi)].\tag{3.4}$$

It is clear that large ξ corresponds to large values of σ_0. The discussion in the Appendix shows that $\gamma(\sigma)\sim a-b/\sigma^\alpha$ (the value of α depends on the theory) which leads to $\gamma'=ab/\sigma^{\alpha+1}$ and thus

$$\sigma_0=\left(\frac{\alpha b}{\eta}\,\xi\right)^{1/(\alpha+1)},$$

presumably a large quantity of ξ is sufficiently large. We find then

$$\Phi(\eta,\xi)=\frac{C((\alpha b\xi/\eta)^{1/(\alpha+1)})}{[2\pi(\alpha+1)\eta(b\eta\xi/\alpha)^{1/(\alpha+1)}]^{1/2}}\exp\{-a\xi+(\alpha+1)[b\xi\eta^\alpha/\alpha^\alpha]^{1/(1+\alpha)}\}\left[1+O\left(\frac{1}{[b\xi\eta^\alpha]^{1/(1+\alpha)}}\right)\right].\tag{3.5}$$

Since $C(\sigma)$ is evaluated at the large σ_0 we may safely use its previously mentioned form $C(\sigma)\sim\sigma^{-p-1}$. In any case it is clear that the interesting large-ξ behavior is given by the exponential factor:

$$\exp\{-a\xi+(\alpha+1)[b\xi\eta^\alpha/\alpha^\alpha]^{1/(1+\alpha)}\}=\left(\frac{q^2}{q_0^{\,2}}\right)^{-a}\exp\left[K\left(\ln\frac{1}{\omega}\right)^{\alpha/(\alpha+1)}\left(\ln\frac{q^2}{q_0^{\,2}}\right)^{1/(\alpha+1)}\right],\tag{3.6}$$

where $K=(\alpha+1)(b/\alpha^{\alpha})^{1/(1+\alpha)}$. (We shall show in the Appendix that a is the anomalous dimension of the underlying fundamental field of the theory.) It is important to remember that our result, Eq. (3.5), is *not* reliable near threshold ($\omega\approx 1$, $\eta\approx 0$) because the corrections to the steepest-descents method become large, nor is it accurate for large η ($\omega\to 0$) because σ_0 is then not large enough for us to know $\gamma(\sigma)$ reliably. Within this intermediate range both the ω and q^2 dependence is determined.

From the form of Eq. (3.6) it is apparent that the leading large-q^2 behavior of the cross section is a uniform fall as a power of q^2. On top of this there is an exponential growth with a fractional power of $\ln q^2$ and a dependence on ω which is characteristic of the underlying theory. Both of the latter dependences are completely determined. However, since we have assumed that $\ln q^2$ is large we are in a regime where the cross section is *falling* as q^2 increases at fixed ω, and consequently it may be difficult to measure A to an accuracy sufficient to distinguish between theories.

There is, however, another physical limit which is very interesting and which should have a substantial cross section. This is the so-called pionization limit where the center-of-mass energy of the produced particle is held fixed at E and q^2 is allowed to grow. This means, of course, that $\omega^{-1}=q/2E$ [we write $q=(q^2)^{1/2}$ for notational simplicity] becomes very large as $q\to\infty$. We also observe that for fixed q as $E\to 0$, ω^{-1} again becomes very large. We shall see that in both cases the cross section is dominated by the behavior of the initial data, called $C(\sigma)$ in Eq. (3.2′), and of $\gamma(\sigma)$ [or $\bar{\gamma}(\sigma)$] for finite (real) values of σ and in particular by their singularity structure.

To see this, we write with the same conventions as before,

$$\omega A(\omega,q^2)=\int_{c-i\infty}^{c+i\infty}\frac{d\sigma}{2\pi i}\,C(\sigma)\left(\frac{q}{2E}\right)^{\sigma}\times\exp\left(-\gamma(\sigma)\ln\frac{q^2}{q_0^2}\right),\tag{3.7}$$

or

$$\omega A(\omega,q^2)=\int_{c-i\infty}^{c+i\infty}\frac{d\sigma}{2\pi i}\,C(\sigma)\left(\frac{q}{2E}\right)^{\sigma}\times\exp\left[-\bar{\gamma}(\sigma)\ln\left(\frac{\ln q^2}{\ln q_0^2}\right)\right],\tag{3.8}$$

for non-asymptotically free and asymptotically free theories, respectively. Now imagine that E is fixed and $q^2\to\infty$. Then we have for determining the saddle-point locations in the two cases [neglecting the possibility of rapid varying $C(\sigma)$]

$$\gamma'(\sigma_0)=\tfrac{1}{2}+\frac{\ln(q_0/2E)}{\ln(q^2/q_0^2)}\simeq\tfrac{1}{2},\tag{3.9n}$$

$$\bar{\gamma}'(\sigma_0)=\frac{\frac{1}{2}(\ln q_0^2)(t-1)+\ln(q_0/2E)}{\ln t},\tag{3.9a}$$

where we have written $t=(\ln q^2)/\ln q_0^2$. Thus in the non-asymptotically free case, Eq. (3.9n), we expect on the basis of positivity and monotonicity properties of $\gamma(\sigma)$ that there will be a solution for σ_0 on the positive real axis through which we can run our contour. If we do so, in the standard way, we find

$$\omega A(\omega,q^2)\simeq\frac{C(\sigma_0)}{[-2\pi\gamma''(\sigma_0)\ln(q^2/q_0^2)]^{1/2}}\times\left(\frac{q}{2E}\right)^{\sigma_0}\left(\frac{q^2}{q_0^2}\right)^{-\gamma(\sigma_0)}.\tag{3.10}$$

The correction terms are presumably of order $(\ln q^2)^{-1}$. In general, of course, we have no reliable way of computing $\gamma(\sigma)$ for these finite values of σ in contrast to the fixed-ω situation considered earlier. We can really then say nothing beyond the fact that $A(\omega,q^2)$ has the general form

$$A(\omega,q^2)\sim\left(\frac{1}{\omega}\right)^{1+\alpha}\left(\frac{q^2}{q_0^2}\right)^{\beta}[1+O(1/\ln q^2)]\tag{3.11}$$

with positive α,β. Thus we would predict that A grows as a power of q^2 for fixed E (or ω) and for fixed q^2 grows as an inverse power of ω.

The situation is kinematically somewhat different in the asymptotically free case where the saddle-point location is given by Eq. (3.9a). We see that for large t, $\bar{\gamma}'(\sigma_0)$ becomes very large and thus we are driven to the right-most singularity of $\bar{\gamma}(\sigma)$. This is precisely what would happen if we were considering instead of fixed E, $q^2\to\infty$ the limit q^2 fixed, $E\to 0$. Of course we must also know the location of the singularities of the initial data, $C(\sigma)$. It seems reasonable to argue, as do De Rújula *et al.*,[9] that while $C(\sigma)$ might be expected to have a behavior [near a singularity of $\bar{\gamma}(\sigma)$] like

$$C(\sigma)=D(\sigma)K^{-\bar{\gamma}(\sigma)},\tag{3.12}$$

where $D(\sigma)$ is a smooth function and K is a constant (and greater than unity), for large-enough q^2 the structure of $C(\sigma)$ plays an inessential role. This is because in Eq. (3.8) $\bar{\gamma}$ is multiplied by $(\ln t)$. Now in the case of an asymptotically free theory we know $\bar{\gamma}(\sigma)$ explicitly and (with a caveat to be noted below) can locate its singularities. We should therefore be able to predict the fixed-E large-q^2 as well as fixed-q^2, $E\to 0$ limits of the cross section. Note in either case the familiar scaling variable ω is approaching zero.

There are some qualifications to be kept in mind. First, we cannot really contemplate the limit

$E \to 0$; obviously $E \geq m$, the mass of the observed hadron. But the criterion for the dominance of the right-most singularity in Eq. (3.8) is that $\omega^{-1} = q/2E$ should be sufficiently large that lower-lying singularities are unimportant, so we require merely that $E \ll q$. This is easily achieved, even with $E > m$, for interesting q values. The second point is that although we propose to exploit the singularity structure of $\bar{\gamma}(\sigma)$, it must be remembered that we are taking it to be the leading approximation to the full "anomalous dimension" and so we may not accurately represent the true nature of the singularity. It is possible and indeed quite probable that terms we have neglected in writing down (3.8) (terms down by inverse powers of $\ln q^2$) would, when summed, change the pole in $\bar{\gamma}$ to some other type of singularity, say a square root. This actually happens in a model which is treated in detail in the following paper. On the other hand, the location of the singularity would not be expected to change significantly and we shall ignore the effect here. What is involved, of course, is that the larger the quantity $\omega^{-1} = q/2E$ is, the more intimately it probes the singularity. We will give an example in a moment that illustrates the point.

We turn now to the evaluation of Eq. (3.8) in the large-q^2 large-ω^{-1} limit. If we are concerned with the singlet cross section, $\bar{\gamma}$ should be taken as the smallest eigenvalue of the anomalous-dimension matrix, Eq. (2.6). The right-most singularity of the elements of the matrix occurs at $n=0$; by diagonalizing the matrix we see easily that the lowest eigenvalue also has its right-most singularity at $n=0$. In fact, in the neighborhood of the pole, $\bar{\gamma}(n) = -a/n$, where $a = 4C_2(G)$. (We have been a bit cavalier about our definition of the "anomalous-dimension" matrix. Our matrix should actually be multiplied by $[\frac{11}{3}C_2(G) - \frac{4}{3}T(R)]^{-1}$ but for our present purposes this is irrelevant.) If we replace $\bar{\gamma}(n)$ by $-a/(n-1)$ and deform the contour around this right-most singularity, ignoring all others we have

$$\omega^2 A(\omega, q^2) = \oint \frac{d\sigma}{2\pi i} D(1+\sigma) \exp[\sigma(\ln\omega^{-1}) + \xi/\sigma], \tag{3.13}$$

where we have written $\xi = a \ln Kt$ with $t = (\ln q^2)/\ln q_0^2$. There is clearly a saddle point at $\sigma = (a\xi/\ln\omega^{-1})^{1/2}$, and we take D our of the integral, evaluated at the saddle point. We find then

$$\omega^2 A(\omega, q^2) \simeq D(1 + (\xi/\ln\omega^{-1})^{1/2}) \times \left[\delta(1-\omega) + \left(\frac{\xi}{\ln\omega^{-1}}\right)^{1/2} I_1(2(\xi/\ln\omega^{-1})^{1/2})\right]. \tag{3.14}$$

The δ function is irrelevant and the important part about the Bessel function I_1 is its asymptotic form, namely,

$$I_1(z) \to e^{+z}/(2\pi z)^{1/2}[1 - 3/8z + \cdots]. \tag{3.15}$$

Ignoring the δ function [which appears only because we neglected the expected falloff for large σ of $D(\sigma)$] we have then

$$\omega^2 A(\omega, q^2) \simeq \frac{1}{2\sqrt{\pi}} D(1 + (\xi/\ln\omega^{-1})^{1/2}) \times \left(\frac{\xi}{(\ln\omega^{-1})^3}\right)^{1/4} \exp[2(\xi/\ln\omega^{-1})^{1/2}]. \tag{3.16}$$

The actual cross section for small ω is given by

$$q^2\, d\sigma/d\omega = \text{const} \times (\omega^2 - 4m^2/q^2)^{1/2} A(\omega, q^2). \tag{3.17}$$

The phase-space factor $(\omega^2 - 4m^2/q^2)^{1/2}$ will for a given q^2 ultimately cut off the cross section for sufficiently small ω, but aside from this there is a general increase as ω decreases associated with the obvious factor of ω^{-2} and the exponential dependence on $\ln\omega^{-1}$. Evidently, for fixed ω, the cross section increases with q^2. Both of these trends are consistent with what is observed, but it would be foolish to attempt a detailed comparison with experiment until the total cross section is observed to scale. Note, incidentally, that for comparison with standard inclusive annihilation formulas, our A is analogous to $\bar{F}_1$ and we have set $\bar{F}_L = 0$.

We return briefly to the question raised earlier that the actual right-most singularity in $\bar{\gamma}$ might not actually be a pole. As a simple example, consider

$$J \equiv \int_{c-i\infty}^{c+i\infty} \frac{d\sigma}{2\pi i} \exp\{\sigma \ln\omega^{-1} + \zeta[\sigma - (\sigma^2 - 2a)^{1/2}]\}. \tag{3.18}$$

We see that if we treat $2a$ as small this becomes precisely our previous integral, Eq. (3.13) [without $D(\sigma)$] if we write $\xi = a\zeta$. However, exact evaluation yields

$$J = \delta(1-\omega) + \frac{(2a\zeta^2)^{1/2}}{[(\ln\omega^{-1})^2 + 2\zeta(\ln\omega^{-1})]^{1/2}} \times I_1([2a(\ln\omega^{-1})^2 + 4a\zeta\ln\omega^{-1}]^{1/2}). \tag{3.19}$$

We see that if $\ln\omega^{-1} \lesssim 2\zeta$ we recover our old answer, but if the inequality is violated, the answer changes significantly. This puts a quantitative limit on the allowable ω values for which Eqs. (3.14) and (3.16) are reliable. Recalling that

$\zeta = \ln Kt$ we find

$$1 \ll \omega^{-1} \lesssim [(\ln q^2)/\ln q_0^2]^2 \quad \text{(setting } K=1\text{)}. \tag{3.20}$$

Another example that can be worked out is to take $\bar{\gamma}(\sigma) = \sigma - (\sigma^2 + \alpha^2)^{1/2}$, which replaces the pole at $\sigma = 0$ obtained for small α^2 by branch points of the imaginary axis at $\pm i\alpha$. We again find that if $\ln\omega^{-1} \lesssim 2\zeta$ the details of the singularity are not too important. We must emphasize that the use of the lowest approximation to $\bar{\gamma}$ is definitely suspect in the true Regge limit $\omega^{-1} \to \infty$: A precise prediction depends on both the location and structure of the singularities of $\bar{\gamma}(\sigma)$. However, for sufficiently large t one can use the lowest approximation to $\bar{\gamma}$ for a significant range of ω, namely that given by Eq. (3.20), and the ω dependence over and above that reflected by the approximate location of the singularity (in our case the factor ω^{-2} in A) is interesting and reliable.

Finally, we note that when we consider a nonsinglet cross section, the right-most singularity in the anomalous dimension, Eq. (2.5), is at $n = 0$. This leads to the same cross section obtained above except that a power of ω disappears, i.e., $\omega A^{\text{sing}} \to A^{\text{nonsing}}$. The numerical value of a is changed by $C_2(G) \to C_2(R)/2$.

APPENDIX

In the text we have discussed the behavior of the annihilation cross section on the assumption that the moments of the cross section have a large-q^2 behavior fully analogous to that of the moments of the electroproduction structure functions. For theories without vector mesons, this assumption has, in its essential points, been justified by Mueller.[5] His argument, however, slights some fine points of renormalization-group theory and then does not put the final results into quite the simple form we need. In this appendix we recast Mueller's work in a form which remedies these minor defects. For simplicity we consider, following Mueller, the process $\phi(q) \to \phi(p) + X$ in a $\lambda\phi^4$ theory, where X stands for unobserved hadrons. The extension to general (non-vector-meson) renormalizable field theories is tedious but straightforward.[10]

The inclusive annihilation cross section, $A(q,p)$ satisfies the integral equation

$$A(q,p) = I(q,p) + \frac{2}{(2\pi)^4} \int d^4q' |\Delta(q')|^2 \times I(q,q')A(q',p)\,, \tag{A1}$$

where $\Delta(q')$ is the full propagator for the scalar field and I is a two-particle irreducible kernel defined below. The explicit propagators appear because A and I are defined with external-leg propagators amputated. Note that we must write $|\Delta(q')|^2$ because we are dealing with a cross section and the kinematics are such that q' is timelike and thus $\Delta(q')$ is complex. [See the following paper, discussion following Eq. (3.1), for kinematic details.] In terms of Feynman diagrams $A(q,p)$ is defined as follows: Take the full set of graphs for two-body scattering and, in all possible independent ways, cut a set of internal lines [i.e., replace $i(p^2-\mu^2)^{-1}$ by $2\pi\delta(p^2-\mu^2)$] so that the incoming $\phi(p)$, $\phi(q)$ are completely separated from the outgoing $\phi(p)$, $\phi(q)$. The prescription for I is the same, with the further restriction that any graph that can be decomposed into two graphs like A by cutting precisely two internal lines is rejected; there are no two-particle intermediate states. These definitions are illustrated in Fig. 1.

To discuss the large-q^2 limit of $A(q,p)$ we shall use the so-called improved renormalization-group method.[11] This method involves introduction of a mass parameter, m, which is not identical to the physical mass but such that $m=0$ corresponds to zero physical mass. Then one carries out renormalization subtractions with momenta evaluated at some off-mass-shell point, μ, in such a way that the zero-physical-mass limit may be taken without introducing spurious infrared divergences. When this is done, the one-particle irreducible Green's functions $\Gamma^{(n)}$ satisfy

$$[D - n\gamma(g)]\Gamma^{(n)}(\underline{p}; g, m, \mu) = 0\,, \tag{A2}$$

where

$$D \equiv \mu \frac{\partial}{\partial\mu} + \beta(g)\frac{\partial}{\partial g} - \hat{\gamma}(g) m \frac{\partial}{\partial m}\,; \tag{A3}$$

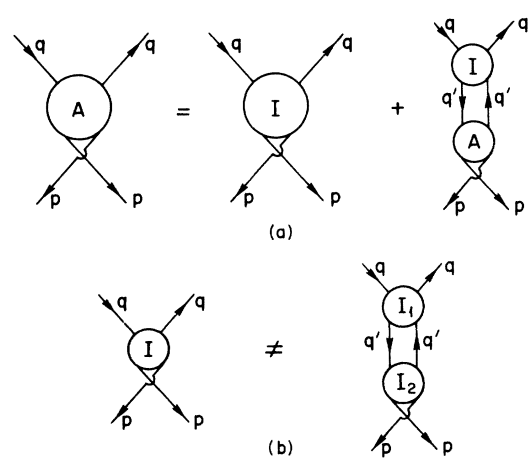

FIG. 1. (a) Graphical structure of the integral equation describing the process $q \to p + X$, and (b) graphical definition of a two-particle irreducible kernel.

the quantities β, $\hat{\gamma}$, and γ, are *apriori* unknown functions of only the dimensionless coupling constant g—independent of the cutoff and the renormalization mass μ and $\underline{p}$ stands for a set of momenta. This homogeneous equation (A2) may be explicitly solved, with the result

$$\Gamma^{(n)}(\lambda \underline{p}; g, m, \mu) = \lambda^{4-n} \exp\left(-\int_1^\lambda \frac{d\lambda'}{\lambda'} n\gamma(g(\lambda'))\right) \times \Gamma^{(n)}(\underline{p}; g(\lambda), m(\lambda), \mu) , \quad \text{(A4)}$$

with

$$\lambda \frac{d}{d\lambda} g(\lambda) = \beta(g(\lambda)), \quad g(1) = g ,$$
$$\lambda \frac{d}{d\lambda} m(\lambda) = [-1 + \hat{\gamma}(g(\lambda))] m(\lambda), \quad m(1) = m . \quad \text{(A5)}$$

In deducing this result, we have used the fact that the dimensions of $\Gamma^{(n)}$ in the sense of power counting are $4-n$, so that

$$\left(\mu \frac{\partial}{\partial \mu} + m \frac{\partial}{\partial m} + \lambda \frac{\partial}{\partial \lambda}\right) \Gamma^{(n)}(\lambda \underline{p}; g, m, \mu) = (4-n)\Gamma^{(n)}(\lambda \underline{p}; g, m, \mu) ,$$

together with the method of characteristics. Assuming that β has a zero at some $g = g_0$ and that $\hat{\gamma}(g_0) < 1$, the large-λ behavior of $\Gamma^{(n)}$ is simple: $g(\lambda) \to g_0$, $m(\lambda) \to 0$ and

$$\Gamma^{(n)}(\lambda \underline{p}; g, m, \mu) \to \lambda^{4-n[1+\gamma(g_0)]} \Gamma^{(n)}(\underline{p}; g_0, 0, \mu) . \quad \text{(A6)}$$

In words, the asymptotic behavior of $\Gamma^{(n)}$ is governed by the Green's functions of the zero-mass theory.

We want to apply these ideas to a cross section, not a Green's function. However, the quantity $A(q,p)$ is just the discontinuity of a Green's function, so that it evidently satisfies the renormalization-group equation, Eq. (A2). It is also true that the kernel, $I(q,p)$, of the integral equation, Eq. (A1), satisfies the same renormalization-group equation. To see this, we remark that we were to construct A by an iteration process in powers of V, no potentially divergent momentum integrations are encountered. In Eq. (A1) the q' integration domain is finite. [See discussion of Eq. (3.1) in the following paper.] Consequently, all of the loop integrations that must be controlled by renormalization subtractions reside within I itself, and I is rendered finite by the same counterterms that control the full Green's functions. In the standard derivations of the improved renormalization group, this is all that is required to show that $[D - n\gamma(g)] I(q,p) = 0$.

This means that the asymptotic behavior of A, I, and Δ may be displayed in the standard renormalization-group form:

$$A(\lambda q, p; g, m, \mu) \to \lambda^{-4\gamma(g_0)} A(q, p/\lambda; g_0, m(\lambda), \mu) ,$$
$$I(\lambda q, p; g, m, \mu) \to \lambda^{-4\gamma(g_0)} A(q, p/\lambda; g_0, m(\lambda), \mu) , \quad \text{(A7)}$$
$$\Delta(\lambda q; g, m, \mu) \to \lambda^{-2+2\gamma(g_0)} \Delta(q; g_0; m(\lambda), \mu) .$$

(We recall that A, I correspond to $n=4$, but $\Delta^{-1} = \Gamma^{(2)}$.) As we have seen, in the large-λ limit, $m(\lambda) \to 0$, but there are infrared problems encountered in simply setting $m(\lambda) = 0$. Kinematically speaking, $A(q,p)$ is a forward scattering amplitude and has the infrared divergences associated with exceptional momentum configurations. As a consequence the behavior of $A(q,p)$ in the large-q limit will not be given by the renormalization-group power, $\lambda^{-4\gamma(g_0)}$. Indeed, our whole effort is directed toward determining the actual power.

It is convenient to extract the explicit renormalization-group powers by defining

$$\mathcal{A}(q,p) = (q^2/\mu^2)^{2\gamma} A(q,p) ,$$
$$\mathcal{I}(q,p) = (q^2/\mu^2)^{2\gamma} I(q,p) , \quad \text{(A8)}$$
$$\bar{\Delta}(q) = (q^2/\mu^2)^{-\gamma} \Delta(q) .$$

The new quantities then scale according to the model

$$\mathcal{A}(\lambda q, p; g, m, \mu) \to \mathcal{A}(q, p/\lambda; g_0, m(\lambda), \mu)$$

and (A9)

$$\mathcal{A}(q,p) = \mathcal{I}(q,p) + \frac{2}{(2\pi)^4} \int d^4q' |\bar{\Delta}(q')|^2 \times \mathcal{I}(q,q') \mathcal{A}(q',p) .$$

Following Mueller's argument, we convert this four-dimensional integral equation to one involving only a single variable. This procedure is described in some detail in the following paper, so we just sketch the method. Form the projection

$$a_n(q^2, p^2) = 4\left(\frac{p^2}{q^2}\right)^{(n+1)/2} \times \int d\xi \sinh\xi \sinh n\xi \, \mathcal{A}(\xi, q^2, p^2) , \quad \text{(A10)}$$

where

$$\cosh\xi = \frac{q \cdot p}{(q^2 p^2)^{1/2}} = \tfrac{1}{2}\omega\left(\frac{q^2}{p^2}\right)^{1/2} ,$$

with ω the conventional $\omega = 2q \cdot p/q^2$. In the limit $q^2 \gg p^2$ the projection takes the form

$$a_n(q^2, p^2) \to \int_0^1 d\omega \, \omega^n \mathcal{A}(q,p) . \quad \text{(A11)}$$

Applied to the integral equation, Eq. (A9), the transform has the virtue of yielding the single-variable equation

$$a_n(q^2,p^2)=i_n(q^2,p^2)+\frac{1}{16\pi^3 n}\int^{q^2} u\,du|\bar{\Delta}(u)|^2 \times i_n(q^2,u)a_n(u,p^2)\ . \tag{A12}$$

The precise limits on the integral equation are easily found and are $(p^2)^{1/2}+m_T<u^{1/2}<(q^2)^{1/2}-m_T$, where m_T is the lowest threshold in $I(q,p)$ in the variable $(q-p)^2$.

The projection which takes us from the cross section $\mathcal{G}(q,p)$ to what are essentially (in the large-q^2 limit) the moments, $a_n(q^2,p^2)$ (in the variable ω) obviously commutes with the renormalization-group differential operator. Consequently, a_n and i_n have the same sort of asymptotic scaling behavior as do $\mathcal{G}$ and $\mathcal{I}$, namely,

$$\begin{aligned} i_n(\lambda^2q^2,p^2;g,m,\mu)&\to i_n(q^2,p^2/\lambda^2;g_0,m(\lambda),\mu)\ ,\\ a_n(\lambda^2q^2,p^2;g,m,\mu)&\to a_n(q^2,p^2/\lambda^2;g_0,m(\lambda),\mu)\ , \end{aligned} \tag{A13}$$

We are certain that a_n will not have a finite limit as $m(\lambda)\to 0$ because of infrared divergences. On the other hand, i_n will exist in this limit. The reason is that the infrared divergence in $\mathcal{G}$ arises from the two-particle intermediate state and this is *missing* from $\mathcal{I}$ because it has been defined as being two-particle irreducible. Mueller has studied this question in detail and has shown that to any finite order of perturbation theory $\mathcal{I}(q,p)-\mathcal{I}(g,0)$ is of the order $p^2/q^2\omega^2$. The lower limit on ω is $2(p^2/q^2)^{1/2}$, so that the correction terms are not small for small ω. When we make our projection, however, to find $i_n(q^2,p^2)$ the small-ω region is suppressed by a factor ω^n, hence for $\mathrm{Re}\,n>0$ we may safely assert that

$$i_n(q^2,p^2;g,m,\mu)\underset{q^2\to\infty}{\sim} i_n(q^2,0;g_0,0,\mu) \tag{A14}$$

and that the latter quantity is finite.

We now have enough information to show that for large-q^2, $a_n(q^2,p^2)$ factorizes:

$$a_n(q^2,p^2,g,m,\mu)\underset{q^2\to\infty}{\sim} b_n(q^2)c_n(p^2)\ . \tag{A15}$$

The p^2 dependence of a_n does *not* disappear from a_n, as is the case with i_n according to Eq. (A14), and this is of course associated with the infrared behavior of a_n. In the subsequent equations we shall write $i_n(q^2,0;g_0,\mu)$ simply as $i_n(q^2,0)$, but the meaning is that it is the kernel computed in the indicated zero-mass limit at the fixed point g_0 of the renormalization group. We now turn to the integral equation which governs the behavior on a_n and look at it as a power series in the kernel i_n. Such equations always have a convergent power-series solution. In the lowest nontrivial order we have (we drop the subscript n which plays no role here)

$$\begin{aligned} a(q^2,p^2)&=i(q^2,p^2)+\int^{q^2}(du)i(q^2,u)i(u,p^2)\\ &\equiv i(q^2,p^2)+\int^{\mu q}(du)i(q^2,u)i(u,p^2)\\ &\quad+\int_{\mu q}^{q^2}(du)i(q^2,u)i(u,p^2)\ . \end{aligned} \tag{A16}$$

For ease of writing we have set

$$(du)\equiv\frac{1}{16\pi^3 n}u|\Delta(u)|^2du$$

and use the notation $q\equiv(q^2)^{1/2}$. We have split the region of integration so that in the first term $q^2\gg u$, while in the second $u\gg p^2$. Then in the large-q^2 limit.

$$\begin{aligned} a(q^2,p^2)&=i(q^2,0)+i(q^2,0)\int^{\mu q}(du)i(u,p^2)+\int_{\mu q}^{q^2}(du)i(q^2,u)i(u,0)\ ,\\ &=i(q^2,0)\left(1+\int^{\mu q}(du)i(u,p^2)\right)+\int^{q^2}(du)i(q^2,u)i(u,0)-i(q^2,0)\int^{\mu q}(du)i(u,0)\ , \end{aligned} \tag{A17}$$

where in the first line we have used the limiting behavior of the kernel, Eq. (A14), in the two regions of integration and in the second, simply added and subtracted the term

$$\int^{\mu q}(du)i(q^2,u)i(u,0)=i(q^2,0)\int^{\mu q}(du)i(u,0)$$

in the large-q^2 limit. Then, to *second* order in i_n we may write, in place of (A17),

$$\begin{aligned} a(q^2,p^2)&=\left(i(q^2,0)+\int^{q^2}(du)i(q^2,u)i(u,0)\right)\\ &\quad\times\left[\frac{1+\int^{\mu q}(du)i(u,p^2)}{1+\int^{\mu q}(du)i(u,0)}\right]\\ &=b(q^2)c(p^2)\ . \end{aligned} \tag{A18}$$

The quantity $c(p^2)$ would appear to depend on q through the upper limit of the u integration. However, the expression we started with did not de-

pend on the value of this cutoff, and thus our final expression cannot—up to terms that vanish as $q^2 \to \infty$. We must therefore be able to replace the upper limit in $c(p^2)$ by infinity. We note that $b(q^2)$ is just the first two terms in the iteration solution of the formal equation,

$$a(q^2, 0) = i(q^2, 0) + \int^{q^2} (du) i(q^2, u) a(u, 0) , \qquad \text{(A19)}$$

and that this quantity depends not only on the zero-mass $g = g_0$ kernel, $i(q^2, 0)$, but also on the full kernel, $i(q^2, p^2; g, m, \mu)$. Similarly, $c(p^2)$, which in this approximation is

$$c(p^2) = \lim_{\Lambda^2 \to \infty} \frac{1 + \int^{\Lambda^2} (du) i(u, p^2)}{1 + \int^{\Lambda^2} (du) i(u, 0)} , \qquad \text{(A20)}$$

depends on both of these quantities.

This lowest-order calculation suggests that, in general,

$$a(q^2, p^2; b, m, \mu) \to a(q^2, 0) c(p^2) ,$$

$$c(p^2) = \lim_{\Lambda^2 \to \infty} \frac{1 + \int^{\Lambda^2} (du) a(u, p^2)}{1 + \int^{\Lambda^2} (du) a(u, 0)} . \qquad \text{(A21)}$$

To prove this we proceed by induction using arguments patterned after what we have just done to second order. Denoting by a^j the jth iteration approximation to a, we have (always imagining the limit $q^2 \to \infty$)

$$\begin{aligned} a^j(q^2, p^2) &= i(q^2, p^2) + \int^{q^2} (du) i(q^2, u) a^{j-1}(u, p^2) \\ &= i(q^2, 0) + \int^{\mu q} (du) i(q^2, 0) a^{j-1}(u, p^2) + \int_{\mu q}^{q^2} (du) i(q^2, u) a^{j-1}(u, 0) c^{j-1}(p^2) , \end{aligned} \qquad \text{(A22)}$$

where we have used $i(q^2, p^2) \to i(q^2, 0)$ when appropriate and the assumed corrections of the relation $a^{j-1}(q^2, p^2) \to a^{j-1}(q^2, 0) c^{j-1}(p^2)$ for large q^2. Thus we have

$$\begin{aligned} a^j(q^2, p^2) &= i(q^2, 0) \left(1 + \int^{\mu q} (du) a^{j-1}(u, p^2)\right) + c^{j-1}(p^2) \left(\int^{q^2} (du) i(q^2, u) a^{j-1}(u, 0) - \int^{\mu q} (du) i(q^2, 0) a^{j-1}(u, 0) \right) \\ &= c^{j-1}(p^2) \left[i(q^2, 0) + \int^{q^2} (du) i(q^2, u) a^{j-1}(u, 0) \right] \\ &= c^j(p^2) a^j(q^2, 0) . \end{aligned} \qquad \text{(A23)}$$

In going from the first to the second line we have used

$$\left(1 + \int^{\mu q} (du) a^{j-1}(u, p^2)\right) = c^{j-1}(p^2) \left(1 + \int^{\mu q} (du) a^{j-1}(u, 0)\right) ,$$

and in going from the second to the third line we note that the quantity in square brackets is at least first order in the kernel, so changing c^{j-1} to c^j involves terms of higher order than considered. This completes the induction argument.

Finally, we recall that $a_n(q^2, p^2; g, m, \mu)$ satisfies the renormalization-group equation

$$D a_n(q^2, p^2) = \left(\mu \frac{\partial}{\partial \mu} + \beta \frac{\partial}{\partial g} - \hat{\gamma} m \frac{\partial}{\partial m} \right) a_n = 0 . \qquad \text{(A24)}$$

[Recall we have taken out the term $n\gamma$ by our scaling of $A(q, p)$.] Then, since a_n factors for large q^2, we also have

$$\frac{D a_n(q^2, p^2)}{a_n(q^2, p^2)} = 0 = \frac{D a_n(q^2, 0)}{a_n(q^2, 0)} + \frac{D c_n(p^2)}{c_n(p^2)} , \qquad \text{(A25)}$$

so that

$$\frac{D a_n(q^2, 0)}{a_n(q^2, 0)} = \frac{-D c_n(p^2)}{c_n(p^2)} = \gamma_n' . \qquad \text{(A26)}$$

Evidently, γ_n' is independent of q^2, and p^2 and is just a function of the coupling constant of the theory. Therefore,

$$(D - \gamma_n') a_n(q^2, 0) = 0 ,$$

which implies that for large q^2,

$$a_n(q^2, 0) \to (q^2)^{-\gamma_n'(g_0)} \alpha_n . \qquad \text{(A27)}$$

When we reconstruct the projection of the cross section A [rather than our $\mathcal{A}$, Eq. (A8)], call it $A_n(q^2, p^2)$, we find

$$\begin{aligned} A_n(q^2, p^2) &= (q^2/\mu^2)^{-2\gamma - \gamma_n'} B_n(p^2) , \\ B_n(p^2) &= \alpha_n c_n(p^2) . \end{aligned} \qquad \text{(A28)}$$

Since for large q^2, our projection defining A_n becomes a simple moment, we have the final desired theorem:

$$\int_0^1 d\omega\, \omega^n A(\omega, q^2, p^2) \to C_n(p^2) (q^2/\mu^2)^{-\gamma_n} , \qquad \text{(A29)}$$

where we have written $\gamma_n \equiv 2\gamma + \gamma_n'$. This is in no way distinguishable from the electroproduction result and will allow us to say useful things about the cross section once we know something about the "anomalous dimension" γ_n.

This quantity, γ_n, may be computed by brute force to any finite order of perturbation theory. Unless the coupling constant is small, such a calculation is unreliable. We would like to identify general properties of γ_n that have a chance to be true to all orders. In the spacelike case, two such properties are known: (1) γ_n' vanishes like n^{-2} in the large-n limit, and (2) $d\gamma_n/dn > 0$. The second is obviously true here also and the first can be easily demonstrated. To see this, one notes that $c_n(p^2)$ is the ratio of quantities such as

$$d_n = 1 + \int^{\Lambda^2} (du) a_n(u, p^2) ,$$

and by definition

$$a_n(u, p^2) = \int_0^{\xi_m} d\xi \, \frac{\sinh\xi \, \sinh n\xi}{\exp[(n+1)\xi_m]} \, \mathcal{A}(u, p^2, \xi)$$

$$< \tfrac{1}{4} \int_0^{\xi_m} d\xi \exp[-(n+1)(\xi_m - \xi)] \mathcal{A}(u, p^2, \xi) ,$$

where $\xi_m = \frac{1}{2}\ln(u/p^2)$ (assuming that large u is the most important). Evidently then, a_n falls like $1/n$ for large n, barring pathologies. When we recall that (du) has a $1/n$ in it, we see that for large n, d_n, and consequently c_n, behaves like $1 + O(1/n^2)$. But we know that $\gamma_n' = Dc_n/c_n$, and thus γ_n' falls like $1/n^2$ and $\gamma_n \to 2\gamma + O(1/n^2)$. This is precisely what one proves about the anomalous dimension in the spacelike case.[4] Finally, we remark that from the work of Coote[10] one can see that in a Yukawa theory, because of different kinematics, γ_n' will behave like $1/n$ for large n, in perfect analogy with the usual anomalous dimension.

The conclusion is that in conventional field theories (scalar and Yukawa) the annihilation structure function has behavior completely analogous to that of the electroproduction structure functions: (1) Moments scale for large q^2; (2) scaling is governed by anomalous dimensions γ_n; (3) general features of γ_n, such as large-n behavior and location as well as type of singularities are similar. On the other hand, there is no need for spacelike and timelike γ_n's to have any simple relation to one another, and so no simple relation between electroproduction and annihilation structure functions.

---

*Work supported by the National Science Foundation under Grant No. GP-40392.

[1]G. Parisi, Phys. Lett. 50B, 482 (1974).
[2]D. J. Gross, Phys. Rev. Lett. 32, 1071 (1974).
[3]Stanford Linear Accelerator Center experiment SP-2, as reported at the Spring 1974 meeting of the American Physical Society, Washington, D. C. (unpublished).
[4]See, for example, C. G. Callan and D. J. Gross, Phys. Rev. D 8, 4383 (1974).
[5]A. Mueller, Phys. Rev. D 9, 963 (1974).
[6]P. Fishbane and J. D. Sullivan, Phys. Rev. D 6, 3568 (1973); V. N. Gribov and L. N. Lipatov, Yad. Fiz. 15, 781 (1972) [Sov. J. Nucl. Phys. 15, 675 (1972)].
[7]D. J. Gross and F. Wilczek, Phys. Rev. Lett. 30, 1343 (1973); H. D. Politzer, *ibid.* 30, 1346 (1973).
[8]D. J. Gross and F. Wilczek, Phys. Rev. D 8, 3633 (1973); 9, 980 (1974).
[9]A. De Rújula *et al.*, Phys. Rev. D 10, 1649 (1974).
[10]Nigel Coote [this issue, Phys. Rev. D 11, 1611 (1975)] has discussed a Yukawa theory with fermions and bosons.
[11]S. Weinberg, Phys. Rev. D 8, 3497 (1973); C. G. Callan, Jr., Princeton University report, 1973 (unpublished).