SOFT X-RAYS AND SECONDARY ELECTRONS

By Joseph A. Becker*

Abstract

Velocity distribution of photo-electrons excited by soft x-rays.—The apparatus was similar to that used in the magnetic analysis of β rays. Soft x-rays excited by primary electrons with 150 to 1500 volts energy, fall on a radiator of W, Pt, Al, etc. The photo-electrons emitted in a plane approximately normal to the uniform magnetic field acting, each travel in a circle with a radius proportional to the speed; those of a given speed which pass through two fixed slits strike a photographic plate, after describing a semi-circle, along a line depending on their speed, thus giving a spectrum. The plates each show a sharp line with a considerable amount of energy right at the $h\nu$ limit corresponding to the energy of the primary electrons. A band due to electrons which had lost from 4 to 11 volts in coming out of the radiator, was also observed. These lines and bands indicate that free or loosely bound electrons are more readily ejected than internal electrons by soft x-rays. However, other lines were obtained due to electrons from various levels of the radiator atoms, with energies diminished by amounts corresponding to the critical potentials.

Critical potentials obtained by magnetic analysis of photo-electrons.—For *aluminum* radiator: L_2L_3, 70 volts; L_1, 80 volts. For *silver*: N_1, 134 volts; M_6, 365-370 volts. When the target for the primary electrons got covered with tungsten oxide, x-rays corresponding to jumps between N and O levels produced photo-electrons of corresponding energy. In this way the following *characteristic lines in the* N *spectrum of tunsgten were observed:* N_3O_5,410; N_2O_4, 482; N_1O_3, 560; N_5O_3, 305; and N_4O_2, 312, all in volts. N_4O_6 is missing, indicating that the O_6 level is not occupied. All the values agree well with the Bohr theory predictions and with other results.

RUTHERFORD,[1] De Broglie,[2] Ellis,[3] and Robinson[4] have shown that beautiful, clearcut, and precise results can be obtained from a magnetic analysis of the velocity distribution in a beam of photo-electrons produced by γ and x-rays, and that this method can be used to measure the absolute frequencies of x-rays with a precision comparing favorably with that which can be obtained by the use of crystals. The following article describes the application of this method to radiation in the soft x-ray region produced by 200 to 1000 volt electrons. This radiation can give important evidence on atomic structure. Incidentally it appeared that the apparatus was also well suited for the study of secondary electrons.

*National Research Fellow.

[1] Rutherford and Robinson, Phil. Mag. **26**, 717 (1923); **28**, 277 (1914).

[2] DeBroglie, Jour. de Phys. et Rad., Sept. 1921, p. 265.

[3] Ellis, Proc. Roy. Soc. A**99**, 261 (1921); A**101**, 1 (1923).

[4] Robinson, Proc. Roy. Soc. A**104**, 455 (1923).

Fig. 1 shows the essential parts of the apparatus. The housing consists of a brass cylinder with an inside diameter of 20 cm and a height of 5.0 cm which is screwed onto a base and made airtight by means of a rubber gasket and 36 screws. T is a target screwed into the top of the cylinder. The electrons are supplied by a hot spiral filament which is about 1 cm above the target. The grid G consists of a cylinder completely surrounding the target and filament. On the side towards R this cylinder has an opening covered over with a thin wire screen of about 1 mm mesh. Thus radiation and, if the potentials are suitable, also secondary electrons from T can strike the radiator R. Any photo-electrons and tertiary electrons coming from R in the proper direction are bent into circular paths by a

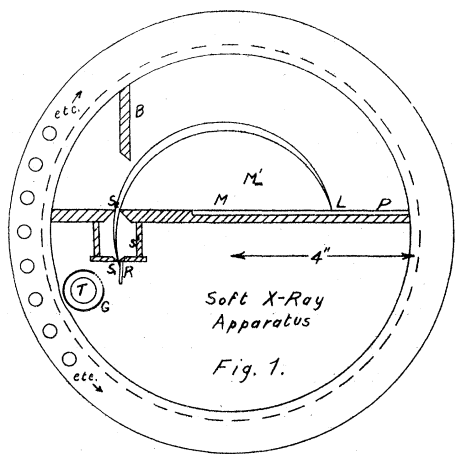

Fig. 1. Sketch of apparatus.

magnetic field perpendicular to the plane of the figure, pass through a narrow slit S_1 and a broader slit S_2, and then strike a Schumann photographic plate P. The magnetic field is produced by a large cylindrical solenoid which can be lowered over the whole apparatus. Its length is 127.2 cm; its mean radius 13.8 cm; its constant 13.05 gauss per ampere. All the electrons from R which have the same velocity and have the proper direction so they can pass through S_1 and S_2 will produce a single line L on P whose width is only slightly greater than S_1, which was usually 0.1 to 0.4 mm, while S_2 was 2.0 mm wide. The relation between this velocity v, the radius of the path ρ, and the magnetic field strength H is given by

$$\rho H = mv/e. \tag{1}$$

ρ can readily be computed from the distances S_1S_2, S_2M, and ML where M is a sharp-edged or sharp-pointed piece of brass placed immediately

above P so as to cast a shadow on P. Hence v can be determined and from it the equivalent voltage or the equivalent frequency ν given by

$$Ve=\tfrac{1}{2}mv^2=h\nu. \tag{2}$$

M' is another marker used to test the sharpness of the shadow cast by the electrons. B is a baffle plate.

The chamber is evacuated by means of a two stage mercury vapor pump backed by a Cenco oil pump. With the filament cold, the pressure as indicated on a MacLeod gauge was less than 10^{-6} mm. With a hot filament the pressure rose to 1 or 2×10^{-4} mm, depending on the type of filament. Ordinary Coolidge tube tungsten filaments were first used but later it was found more advantageous to use oxide coated platinum. Unfortunately the apparatus could not be baked out because of its size and the use of rubber gaskets. This had the result that the target would almost invariably become contaminated. Consequently most of the runs were made with a brass target and only the radiator was changed. It would undoubtedly be advantageous to have everything enclosed in glass and use modern high vacuum technique. Presumably this would necessitate the use of an electrostatic detector since the photographic plate could not stand the baking. The currents involved are not so extremely small as to make this a difficulty.

In the earlier experiments the filament was connected to the negative end of a generator whose voltage could be varied from 300 to 1400 volts. It was found, however, that the voltage varied during each revolution, and besides that there were considerable fluctuations of the r.m.s. value. Later, storage batteries were used almost exclusively for the accelerating voltage, which was varied from 150 to 250 volts.

In all about 150 plates have been exposed. About half of these have been worth saving. In describing the work the results will not be presented in the order in which they were obtained but rather in an order which will bring out the facts most clearly.

Plate R1, shown in Fig. 2, was taken under the following circumstances: Target of brass; radiator of aluminum; filament at -192 volts; target, cylinder, and radiator at zero potential; grid at -203 volts or 11 volts more negative than the filament; filament drop 2.2 volts; field strength 7.46 gauss; current of 10 m-amp. filament to target for $1\frac{1}{2}$ hours. The 192 volt electrons which strike the target produce either soft x-rays or secondary electrons. Of these only the rays can get through the grid to the radiator since the field which opposes the electrons which travel from the target toward the grid is 11 volts greater than the field which has accelerated them. The radiation which strikes the radiator can either eject electrons which are free or only loosely bound to atoms, or electrons

which are located at an atomic energy level whose critical voltage V_c is less than the equivalent voltage of the radiation V_r. In the first case the equivalent voltage of the line which appears on the plate V_l will be equal to V_r. In the second case

$$V_l = V_r - V_c \,. \tag{3}$$

If the atom from which the photo-electron is expelled is beneath the surface, the electron may lose more or less energy in getting out of the radiator and consequently will register with a slower speed than those which come from surface atoms. We should therefore expect a band with a sharp intense edge on the high velocity or right side and which gradually becomes weaker towards the left. The most conspicuous feature of plate R1 is the narrow line A. Its high velocity edge corresponds to 192 ± 2

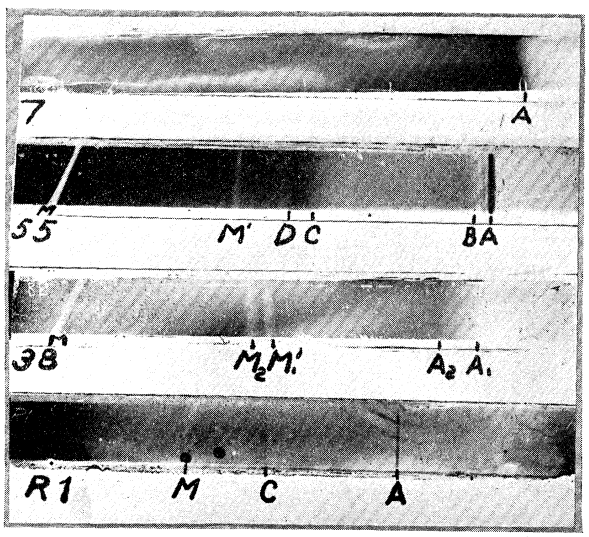

Fig. 2. Plates 7, 55, 38, R 1.

volts; its width corresponds to 2 volts. The only way we can explain this line is by assuming (1) that 192 volt electrons which strike the target produce x-rays whose energy distribution curve has a narrow sharp peak right at the $h\nu$ limit, and (2) that when this monochromatic radiation strikes the radiator it ejects electrons which are free or loosely bound more readily than others. The width of the line corresponds to the velocity distribution of the primary electrons due to the filament voltage drop.

The head of the band at C can also be explained as due to the same incident x-rays which have produced A. In this case, however, the

electrons are apparently ejected from the energy level next beneath the valence shell. If we number the energy levels in order from the nucleus outward this is the L_3 level of aluminum. The voltage of the edge of C is 122 volts. The critical voltage of the L_3 level computed from (3) is then 70 volts. Bohr and Coster[5] assign 70 volts to the L_3 and L_2 levels.

On the original negative a third faint band can be seen to the left of C. Treating it in the same way as C we conclude that it is due to electrons which have come from the L_1 level of aluminum and have lost 80 volts in getting out of the atom. This value agrees well with Millikan and Bowen's[6] value of 83 volts.

These assumptions concerning the energy bunching at the $h\nu$ edge and the ejection of free electrons received further support from the following experiments: Plate 38 (Fig. 2) was exposed without any radiator for 11.5 m-amp.-hr. with an accelerating field of 525 volts from the generator. That the voltage from the generator fluctuated during each revolution is shown by this and numerous other plates such as plate 7 (Fig. 2) in which the band corresponding to A was broadened out. For plate 38 (Fig. 2) an additional marker M' was placed 2 cm from the plate as shown in Fig. 1. This new marker actually cast two sharp and distinct shadows M_1' and M_2' on the plate. By using one of these shadows, together with M' and S_2 as three points on a circle, it was clearly shown that S_1 was acting as one source of electrons and that another source was located at S_1' the intersection of the line TS_1 and the side of the tube supporting S_1 and S_2. Furthermore there were two distinct A bands in the right places to support this conclusion. It would be impossible for secondary electrons from T to produce these effects. To clinch the argument a thin collodion window weighing 0.8 mg/cm^2 was placed over S_1 and the experiment performed. This also gave two A bands in the same positions as before but much weaker, while radiation for the lower voltages was almost entirely absorbed. These bands must therefore be due to x-radiation and cannot be caused by secondary electrons from T. Of course in future plates double sources were avoided by obvious methods.

The second assumption made above, namely that in this region of voltages, 150 to 500 and perhaps higher, the electrons most easily ejected are the free or most loosely bound electrons, receives further support from three plates which are not reproduced here. Plate 9 was the result of an accident. Early in the exposure a stopcock was accidentally turned

[5] Bohr and Coster, Zeits. f. Phys. **12**, 342 (1923)

[6] Millikan and Bowen, Phys. Rev. **23**, 1 (1924)

so as to admit air into the chamber. This oxidized the tungsten filament which was being used and as a result tungsten oxide was deposited over the radiator and target. The accelerating voltage in this case was 1350 to 1430 volts, but the field strength was such that any high velocity electrons would be stopped by the baffle plate *B*. The plate showed two unmistakable bands and three or four others which might be classed as doubtful but quite probable. The strongest ones had equivalent voltages of 410 and 475. If we use Bohr's values and apply the selection principle to predict what lines should occur in the N spectrum of tungsten, we find that the two strongest ones correspond to jumps N_3-O_5, and N_2-O_4 with 410 and 482 equivalent volts. Other jumps that are predicted are N_1-O_3, N_5-O_3, and N_4-O_2 with 551, 305, and 314 volts. The other faint lines on the plate correspond to 560, 305, and 312 volts. This agreement is possible only if we assume that the photo-electrons were essentially free in the atom. The fact that no line appeared for the N_4-O_6 jump which should be a strong line according to the rule, indicates that the O_6 level has not yet been filled in tungsten.

Similar evidence although less complete was obtained from plates 29 and 31, in which the targets consisted of thin sheets of zinc which were supported so as to be heated and vaporized by the bombarding current. In this case the bands corresponded to the L spectrum of zinc. It is significant that these two cases are the only ones in which we have been able to obtain radiations characteristic of the target material. Usually our targets were cool while here they were probably vapors. This would agree with the experience of Foote and Mohler and others, that the efficiency of transformation of electronic to radiant energy is much greater for vapors than solids.

Plate 55 (Fig. 2) shows several interesting features. This plate was taken with a copper target and brass radiator. There is the customary band *A* corresponding to the $h\nu$ radiation ejecting detached electrons, and the band *C* which is produced by the same $h\nu$ radiation ejecting *M* electrons out of zinc and copper in the radiator, thus causing the band to be blurred. At *D* we have a clear case of a reversed band, i.e. increase in blackening towards lower velocities and then a sudden break. We believe that this phenomenon can only be the result of an absorption edge in the photographic plate. We think this band at 134 volts is due to the N_1 or innermost absorption edge of silver. Electrons having more than this energy can excite the silver atom more readily than electrons with a smaller energy. On a number of plates we have found such reversed

bands for the M_6 level of silver at 365 to 370 volts, and for the M_3 level of bromine at 160 volts.

For this plate and all the plates yet to be described, the grid was always at the same potential as the target. Consequently any secondary electrons from the target could strike the radiator and produce tertiary electrons which could then reach the photographic plate. On plate 55 (Fig. 2) to the left of band A there is a region of about 2 mm with practically no more blackening than that due to fogging and scattering; then band B begins. This new band does not have an intense head and changes its intensity gradually, usually decreasing and then increasing toward the left until at the low velocities it is the most intense feature on the plate. Since on the original plates the background is usually much more pronounced when the grid is at zero potential than when it is more negative than the filament, and since in the latter case there is no head to indicate the presence of band B, we think that this band is due to secondary electrons. The distances between A and B varies from 4 to 11 volts, depending on the radiator. Part of A may also be due to secondary electrons. If our analysis is correct we can conclude that when an electron enters a solid and comes out again it has lost either no energy or at least 4 to 11 volts.

Plates obtained with platinum, brass and aluminum as radiators showed that the intensity of A decreases as the atomic number of the radiator increases, and as the resistance increases. It would be interesting to decide which if either of these two is the controlling factor.

These plates illustrate a few of the results that one can hope to obtain by studying soft x-rays and secondary electrons with a magnetic analysis method. The conclusions these experiments seem to force on us are startling indeed, but no other explanation is satisfactory. In ordinary x-rays there is no bunching of energy at the $h\nu$ limit. Holweck,[7] however, who has made a lengthy study of soft x-rays, also came to the conclusion that in the soft x-ray region most of the energy is near the short wave-length limit. The conclusion that for soft x-rays there is a considerable amount of bunching right at the $h\nu$ limit should be a useful tool in the future study of these rays. It ought to be instructive to see whether there is any bunching near the $h\nu$ limit for rays in the neighborhood of 10 A which could be studied by crystal methods in a vacuum spectrograph.

The conclusion that the free or loosely bound electrons are most strongly affected by soft x-rays is not so surprising. For penetrating x-rays the most tightly bound electrons are most readily affected, but

[7] Holweck, Ann. der Phys. **17**, 5 (1922).

as the rays get softer this rule must be modified as both Ellis[3] and Robinson[4] have shown.

In conclusion, the author wishes to express his thanks to Professor R. A. Millikan for his continued interest and stimulation in the work. He is also indebted to Mr. E. L. Rose, who is continuing the work, for his assistance in conducting some of the later experiments.

NORMAN BRIDGE LABORATORY OF PHYSICS,
PASADENA, CALIFORNIA.
June 10, 1924.

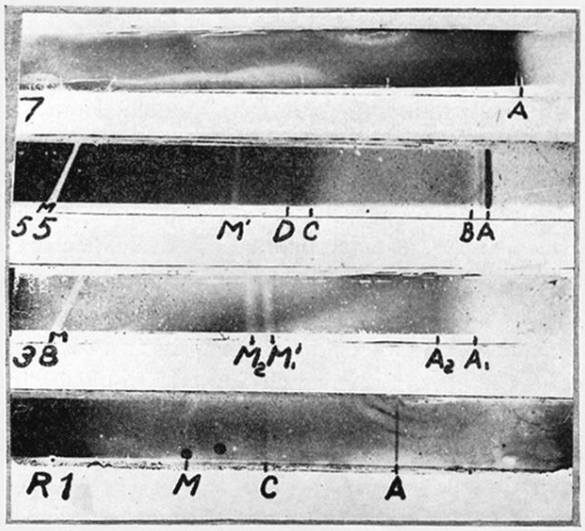

Fig. 2. Plates 7, 55, 38, R 1.