SECTION 12

A STRANGE, STRANGE ATTRACTOR

BY

JOHN GUCKENHEIMER

Examples have been given by Abraham-Smale [1], Shub [1], and Newhouse [2] of diffeomorphisms on a compact manifold which are not in the closure of diffeomorphisms satisfying Smale's Axiom A or in the closure of the set of Ω-stable diffeomorphisms (Smale [1]). The suspension construction (Smale [1]) allows one to give analogous examples for vector fields on compact manifolds.

This note gives another example of a vector field on a compact manifold which does not lie in the closure of Ω-stable or Axiom A vector fields. The interest of this example is that the violation of Axiom A' occurs differently than in the examples previously given. This example has additional instability properties not verified for the previous

---

Research partially supported by the National Science Foundation.

examples. A vector field X is said to be <u>topologically Ω stable</u> if nearby vector fields (in the C^1 topology on the space of vector fields) have nonwandering sets homeomorphic to the nonwandering set of X. Our example is not topologically Ω stable. Moreover, it provides another negative answer to the following question about dynamical systems: is it generically true that the singularities of a vector field are isolated in its nonwandering set? Previous examples of Newhouse have nonisolated singularities in non-attractive parts of the nonwandering set.

The example is based upon numerical studies of a system of differential equations introduced by Lorenz [1]. The system studied by Lorenz seems to have the dynamical behavior of our example, but we do not attempt to make the estimates necessary to prove this statement. I would like to acknowledge the assistance of Alan Perelson in doing the numerical work which underlies this note and conversations with R. Bowen, C. Pugh, S. Smale, and J. Yorke. Finally, we mention the explicit equations of Lorenz which display such marvelous dynamics (see Example 4B.8, p. 141):

$$\dot{x} = -10x + 10y, \quad \dot{y} = -xz + 28x - y, \quad \dot{z} = xy - 8/3\, z.$$

We define a C^∞ vector field X in a bounded region of $\mathbb{R}^3$. Inside the region there will be a compact invariant set A which is an attractor in the sense that A has a fundamental system of neighborhoods, each of which is forward invariant under the flow of X. The set A is two dimensional. To describe the construction of X, we use coordinates (x,y,z) in $\mathbb{R}^3$.

The vector field X is to have three singular points. The first, $p = (0,0,0)$, is a saddle with a two dimensional stable manifold $W^s(p)$. The rectangle $\{(x,y,z) | x = 0, -1 \leq y \leq 1, 0 \leq z \leq 1\}$ is to be contained in $W^s(p)$. The stable eigenvectors of X at p are $\frac{\partial}{\partial y}$ with an eigenvalue of large absolute value and $\frac{\partial}{\partial z}$ with an eigenvalue of small absolute value. The unstable manifold $W^u(p)$ contains the segment from $(-1,0,0)$ to $(1,0,0)$ and has an eigenvalue of intermediate absolute value. Other conditions on $W^u(p)$ are imposed below.

The other two singular points of X are $q_\pm = (\pm 1, \pm 1/2, 1)$. These are saddle points with one dimensional stable manifolds $W^s(q_\pm)$. The segments from $(\pm 1, -1, 1)$ to $(\pm 1, 1, 1)$ are contained in $W^s(q_\pm)$. The negative eigenvalues of X at $q_\pm$ have large absolute values. The remaining eigenvalues of $q_\pm$ are complex with eigenspaces spanned by $\frac{\partial}{\partial y}$ and $\frac{\partial}{\partial z}$. The real parts of these eigenvalues are small.

Consider the square $R = \{(x,y,z) | -1 \leq x \leq 1, -1 \leq y \leq 1, z = 1\}$ and its Poincaré return map θ. The map θ is not defined when X is ± 1 or 0 since these points lie in the stable manifold of one of the singular points. The orbits in R for $X = \pm 1$ never leave R while those for $x = 0$ never return. At all other points of R, θ is defined. Let R_+ be the set $R \cap \{(x,y,z) | 0 < x < 1\}$ and R_- be the set $R \cap \{(x,y,z) | -1 < x < 0\}$. Define $\theta_\pm$ to be θ restricted to $R_\pm$. We assume that there are functions $f_\pm$, $g_\pm$ and a number $\alpha > 1$ with the properties that

$\theta_\pm(x,y) = (f_\pm(x),\ g_\pm(x,y))$, $0 < \partial g_\pm/\partial y < 1/2$, and $df_\pm/dx > \alpha$. The numbers $\lim_{x\to 0} f_\pm(x)$, denoted $\rho_\pm$, are assumed to have the properties $\rho_+ < 0$, $\rho_- > 0$, $\theta_-(\rho_+) < 0$, and $\theta_+(\rho_-) > 0$. The first intersections of $W^u(p)$ with R occur at the points with $x = \rho_\pm$. Finally, it is assumed that the images of $g_\pm$ are contained in the intervals $[\pm 1/4, \pm 3/4]$. Figure 12.1 illustrates these essential features of the flow X.

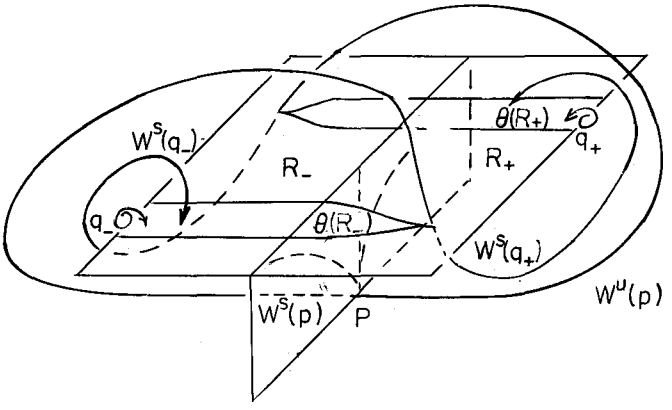

Figure 12.1

We remark that the conditions imposed on the eigenvalues of X at p imply that $\lim_{x\to 0} \partial g_\pm(x,y)/\partial y = 0$ and $\lim_{x\to 0} df_\pm/dx = \infty$. The reason for this behavior is given by solving a linear system of differential equations near a saddle point. The return maps $\theta_\pm$ acquire singularities like a power of x because the trajectories of $R_\pm$ come arbitrarily close to p.

In the theorems which we now state, we assume that the

vector field X is extended to a vector field on a compact three manifold M. We continue to denote the extended vector field X. Note that the only properties used in defining X which do not remain after perturbation are the existence of the functions $f_{\pm}$ and $g_{\pm}$. These functions are introduced to simplify the discussion and are not essential properties of X.

(12.1) Theorem. There is a neighborhood $\mathscr{U}$ of X in the space of C^r vector fields on M $(r \geq 1)$ and a set $\mathscr{V}$ of second category in $\mathscr{U}$ such that if $Y \in \mathscr{V}$, then Y has a singular point which is not isolated in its nonwandering set.

(12.2) Theorem. The vector field X has a neighborhood $\mathscr{U}$ in the space of C^r vector fields on M $(r \geq 1)$ with the property that if $\mathscr{V} \subset \mathscr{U}$ is an open set in the space of C^r vector fields, then there are vector fields in $\mathscr{V}$ whose nonwandering sets are not homeomorphic to each other.

Theorem (12.2) states that X is not in the closure of the set of topologically Ω-stable vector fields.

We attack the proofs of both of these theorems by giving a description of the nonwandering set of X. This description is given largely in terms of "symbolic dynamics" (Smale [4]).

Consider the return map θ of R. We pick out four subsets of $\theta(R)$ which will be used in analyzing the symbolic dynamics of the nonwandering set of X. Denote

$$R_1 = \theta(R_+) \cap \{\rho_+ < x < 0\}$$

$$R_2 = \theta(R_+) \cap \{0 < x < f_+(\rho_-)\}$$

$$R_3 = \theta(R_-) \cap \{f_-(\rho_+) < x < 0\}$$

$$R_4 = \theta(R_-) \cap \{0 < x < \rho_-\}.$$

Figure 12.2 shows these sets. The image of R_1 under θ extends horizontally across R_3 and R_4. $\theta(R_2)$ extends horizontally across R_1. Similarly, $\theta(R_3)$ extends across R_4, and $\theta(R_4)$ extends across R_1 and R_2.

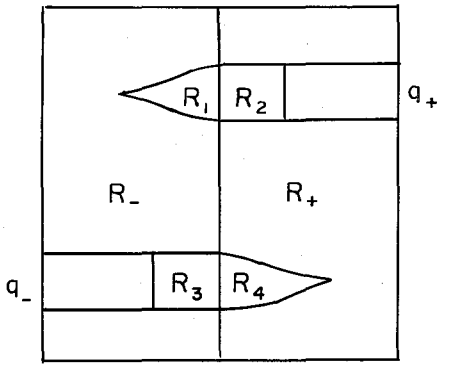

Figure 12.2

Now consider sequences $\{a_k\}_{k=0}^{\infty}$ of the integers 1, 2, 3, and 4 such that, for each k, (a_k, a_{k+1}) is one of the pairs (3,1), (4,1), (1,2), (4,3), (1,4), or (2,4). The set of such sequences forms the underlying space Σ of a "subshift of finite type" with transition matrix

$$\begin{pmatrix} 0 & 1 & 0 & 1 \\ 0 & 0 & 0 & 1 \\ 1 & 0 & 0 & 0 \\ 1 & 0 & 1 & 0 \end{pmatrix}$$

Corresponding to each finite sequence $\{a_0,\ldots,a_n\}$ constructed from "admissible" pairs listed above, the intersection $\bigcap_{k=0}^{n} \theta^k(R_{a_k})$ contains a component which extends horizontally across R_{a_0}. For example, if $a_0 = 1$, then the images of R_2 and R_4 extend across R_1. If $a_1 = 2$, then only the image of R_4 need extend across R_2. Hence $a_2 = 4$, $\theta(R_4)$ extends across R_{a_2}, and $\theta^2(R_4)$ extends across R_1. As n increases, the vertical height of these strips decreases exponentially. If $\{a_k\} \in \Sigma$, then $\bigcap_{k=0}^{\infty} \theta^k(R_{a_k})$ contains an arc crossing R_{a_0} horizontally. There are an uncountable number of sequences in Σ, hence $S = \bigcap_{k=0}^{\infty} \theta^k(\bigcup_{i=1}^{4} R_i)$ contains an uncountable number of arcs extending across each R_i.

We want to investigate whether S is contained in the nonwandering set of θ. If each arc contained in S has an image under some iterate of θ which extends across each R_i, then S will be contained in the nonwandering set of θ. In these circumstances, we prove that 0 is not isolated in the nonwandering set of X. Whether or not every arc in S has an image extending across the set R_i depends only on the functions $f_\pm$ acting on the intervals $(\rho_+,0)$ and $(0,\rho_-)$. Denote by f the discontinuous map $f\colon (\rho_+,\rho_-) \to (\rho_+,\rho_-)$ determined by $f_\pm$ (with, say, $f(0) = 0$.) Consider a subinterval $\gamma \subset (\rho_+,\rho_-)$. Since $df_\pm/dx > \alpha > 1$, the sum of the

lengths of the components of $f^k(\gamma)$ is at least $c\alpha^k$. Therefore, some image of γ has more than one component. The only point of discontinuity for f is $x = 0$, so there is a $k > 0$ and an $x \in \gamma$ with $f^k(x) = 0$.

The map θ has a periodic point of period 2 in R_1 because $\theta^2(R_1)$ crosses R_1 horizontally. Therefore, f has a point r of period 2. Any neighborhood of r has an image which eventually covers (ρ_+,ρ_-). Now assume that there is an open set $U \subset (\rho_+,\rho_-)$, none of whose images cover (ρ_+,ρ_-). Then no image of U contains p. It follows that if U_1 and U_2 are two open sets, none of whose images cover (ρ_+,ρ_-), then $U_1 \cup U_2$ also has this property (because r is in none of its images.) Thus there is a largest open set $U \subset (\rho_+,\rho_-)$ with the property that none of its images cover (ρ_+,ρ_-). It follows that $f^{-1}(U) = U = f(U)$.

We observed above that any interval contains a point which is eventually mapped to 0 by the iterates of f. Thus U contains a neighborhood of 0 and, hence, neighborhoods of $\rho_\pm$. This implies that U contains a neighborhood of each point which eventually maps to 0. Since these points are dense, U is a dense subset of (ρ_+,ρ_-). Notice that the property $f^{-1}(U) \subset U$ implies that the components of U must map <u>onto</u> the components of U. Let (ξ_-,ξ_+) be the component of U containing 0. Some image of $(\xi_-,0)$ contains 0, and hence (ξ_-,ξ_+). (Since $f_-(0) = \rho_-$, the images of 0 are endpoints of components of U.) The first time an image of $(\xi_+,0)$ contains 0, that power of f is continuous on $(\xi_-,0)$. Since f is orientation preserving, it follows that

ξ_- is mapped by this power of f to ξ_-. Therefore ξ_- is a periodic point of f. We conclude that $\rho_\pm$ have images for some power of f which are periodic points of f.

For the return map θ of R, this implies that the images of the vertical lines $x = \rho_\pm$ each remain within a finite set of vertical lines. Because θ contracts in the vertical direction, the intersections of R with $W^u(p)$ have θ-trajectories which tend asymptotically to periodic orbits of of θ. These periodic θ trajectories lie on periodic orbits γ_1, γ_2 for the flow X. Because θ is uniformly hyperbolic (apart from its discontinuity), these periodic orbits are hyperbolic with two dimensional stable and unstable manifolds. Applying the Kupka-Smale Theorem (Smale [1]), we note that it is a generic property of vector fields that the stable manifold of a hyperbolic periodic trajectory intersect the unstable manifold of a singular point transversally. This is not the case here. Thus we conclude that in the open set of vector fields which we have described, those vector fields for which any arc of S eventually extends across each R_i form a set of second category. I do not know whether there is an open set of vector fields with this property.

<u>Proof of Theorem (12.1):</u> Let us assume now that X is chosen so that θ has the property that some image of every arc in S eventually extends across each R_i. If $w \in S$ and U is a rectangular neighborhood of w in R, then $\theta^k(U)$ extends across each R_i for k sufficiently large. Also $\theta^{-k}(U)$ extends vertically across R for k sufficiently large because θ contracts the vertical direc-

tion. It follows that $\theta^{-k}(U) \cap \theta^{k}(U) \neq \emptyset$ for k very large. Thus $\theta^{2k}(U) \cap U \neq \emptyset$ and w is nonwandering. We conclude that S is contained in the nonwandering set of θ. Since S intersects $W^s(p)$, p is in the nonwandering set of X. This proves Theorem (12.1). $\square$

The nonwandering sets of the vector fields satisfying Theorem (12.1) have a two dimensional attractor Λ which contains the origin. The intersection of Λ with R contains S. We want to go further in describing the structure of Λ. This can be done most completely when p is a homoclinic point with $W^u(p) \subset W^s(p)$. This happens when there are powers of f which map ρ_+ and ρ_- to 0.

For purposes of definiteness, we shall describe Λ in the case that $f^2(\rho_\pm) = 0$. Afterwards we indicate the modifications which are necessary when higher powers of f map ρ_+ and ρ_- to 0. Now $R \cap \Lambda = \bar{S}$. If $f^2(\rho_\pm) = 0$, then $\theta(R_1) \subset \overline{R_3 \cup R_4}$, $\theta(R_2) \subset R_1$, $\theta(R_3) \subset R_4$, and $\theta(R_4) \subset \overline{R_1 \cup R_2}$. Consequently, if $\{a_k\}_{k=0}^{\infty}$ is a sequence with $a_i \in \{1,2,3,4\}$, then $\bigcap_{k=0}^{\infty} \theta^k(R_{a_k}) \neq \emptyset$ if and only if $\{a_k\} \in \Sigma$. If $\{a_k\} \in \Sigma$, then there is a segment extending across R_{a_0} which lies in S and hence in Λ. This presents the following picture for Λ. There is a Cantor set of arcs, corresponding to points of Σ, each of which extends across some of the R R_i's. These are joined at their ends by $W^u(p)$. See Figure 12.3. Note that points of $\Lambda - W^u(p)$ have neighborhoods which are homeomorphic to a 2-disk x Cantor set.

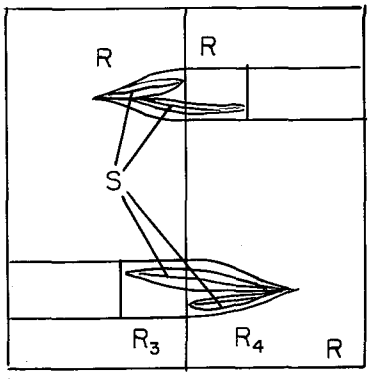

Figure 12.3

If higher powers of f map ρ_+ and ρ_- to 0, then we construct another subshift of finite type as follows. Cut the image of $\theta(R)$ along vertical lines passing through each point in the orbit. $\theta(\rho_+)$ and $\theta(\rho_-)$. This will divide $\theta(R)$ into a number of components, say $R_1,\ldots,R_n$. Define the $n \times n$ matrix T by

$$T_{ij} = \begin{cases} 1 & \text{if } \theta(R_j) \cap R_i \neq \emptyset \\ 0 & \text{if } \theta(R_j) \cap R_i = \emptyset. \end{cases}$$

Let Σ be the (one-sided) subshift of finite type with transition matrix T. Corresponding to each sequence in Σ, there will be exactly one arc crossing R_i which lies in the attractor Λ. The closure of these segments will be $\Lambda \cap R$ as before, because $\bigcap_{k=0}^{\infty} \theta^k(R_{a_k}) = \emptyset$ if $\{a_k\} \notin \Sigma$. Finally, we remark that if θ does not preserve vertical segments in R, then R is to be cut along components of $W^s(p) \cap R$ which also contain points of $W^u(p)$.

Proof of Theorem (12.2): We prove Theorem (12.2) in two steps. In the first step, we consider two flows, X and $\tilde{X}$, of the general sort considered in this paper such that, for the flow X, $W^u(p) \subset W^s(p)$, and for the flow $\tilde{X}$, $W^u(p) \cap W^s(p) = \{p\}$. We prove that X and $\tilde{X}$ have nonwandering sets which are not homeomorphic. The second step demonstrates that vector fields of each of these two classes are dense in some open set in the space of C^r vector fields.

We have described above the attractor $\Lambda(X)$ of a vector field X for which $W^u(p) \subset W^s(p)$. In this case, Λ is path connected and $\Lambda - W^u(p)$ is locally homeomorphic to the product of a 2-disk and a Cantor set. Furthermore, $W^u(p)$ is homeomorphic to the wedge product of two circles, a "figure eight."

Now consider the attractor $\Lambda(\tilde{X})$ of a vector field $\tilde{X}$ for which $W^u(p) \cap W^s(p) = \{p\}$ and Λ is a two dimensional set containing p. If $\Lambda(\tilde{X})$ is to be homeomorphic to $\Lambda(X)$, then $\Lambda(\tilde{X})$ must be path connected. Consider the set C of points $w \in \Lambda(\tilde{X})$ such that no neighborhood of w is homeomorphic to a 2-disk x Cantor set. It is easily seen that $W^u(p) \subset C$ since there are no points of $\Lambda \cap R$ to the left of the line $\rho_- = x$ or to the right of the line $\rho_+ = x$. If $\Lambda(X)$ is homeomorphic to $\Lambda(\tilde{X})$, then C is homeomorphic to the wedge product of two spheres. Since $W^u(p) \not\subset W^s(p)$ for $\tilde{X}$ and $W^u(p) \subset C$, there must be two points of $C-\{p\}$ which are the ω-limit sets of the two trajectories in $W^u(p) - \{p\}$. A single point which is the ω-limit set of a trajectory must be a singular point. There are no singular points of $\tilde{X}$ in $\Lambda(\tilde{X})$ other than p, so we conclude that C

is not homeomorphic to the wedge product of two spheres. Hence $\Lambda(X)$ and $\Lambda(\tilde{X})$ are not homeomorphic. This concludes the first step of the proof.

We now prove that the sets of vector fields X, $\tilde{X}$ of the sort considered above are each dense in some open set. The Kupka-Smale Theorem implies that vector fields like $\tilde{X}$ in that $W^s(p) \cap W^u(p) = \{p\}$ form a set of second category. Since the set of vector fields with $p \in \Lambda$ and Λ two dimensional is a second category subset of an open set, there is a dense set of vector fields of the form of $\tilde{X}$ in some open set of vector fields.

The only thing remaining to prove is that there is a dense subset of an open set of vector fields for which $W^u(p) \subset W^s(p)$. Consider the effect on $W^u(p)$ of a perturbation Y of $\tilde{X}$ parallel to the x-axis which has the effect of decreasing ρ_- and increasing ρ_+. See Figure 12.4.

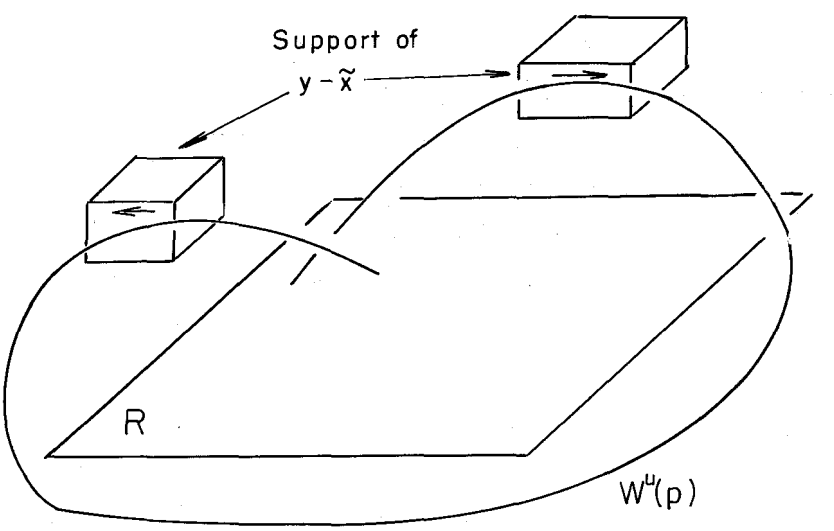

Figure 12.4

We examine successive intersections of $W^u(p)$ with R for the vector fields Y and $\tilde{X}$. The functions f_+ and f_- are orientation preserving. Consequently, as long as the corresponding, successive intersections for the two vector fields lie on the same side of the line $x = 0$ in R, the effect of the perturbation is push the intersections following ρ_- along $W^u(p)$ to the left and to push the intersections following ρ_+ to the right. Furthermore, since the map θ expands in the x direction, the distance between the corresponding, successive points of intersection grows exponentially. The distance cannot grow indefinitely, so after sometime, the corresponding points of intersection lie on opposite sides of the line $x = 0$. Thus, for some perturbation intermediate between Y and $\tilde{X}$, there are points of intersection of $W^u(p)$ with R which lie on the line $x = 0$ (in both directions along $W^u(p)$.) This means that $W^u(p) \subset W^s(p)$ for the intermediate perturbation. We conclude that there is a dense set of vector fields in some open set of the space of vector fields for which $W^u(p) \subset W^s(p)$ to finish the proof of Theorem (12.2).

As is traditional in dynamical systems, we end with a question. The vector fields described here are very pathological from the point of view of topological dynamics. Yet they seem to preserve as much hyperbolicity as they possibly could without satisfying Axiom A. There is now a well developed "statistical mechanics" for attractors satisfying Axiom A (Bowen-Ruelle [1]). How much of this statistical theory can be extended to apply to the vector fields described here?

REFERENCES

Abraham, R. [1] Introduction to Morphology, Publ. Dept. Math. Lyon 4 (1972), 38-114.

[2] Macrodynamics and Morphogenesis, in "Evolution in the Human World", E. Jantsch and C. Waddington, eds. (to appear).

Abraham, R. and Marsden, J. [1] "Foundations of Mechanics", Benjamin (1967).

Abraham, R. and Robbin, J. [1] "Transversal Mappings and Flows", Benjamin (1968).

Abraham R. and Smale, S. [1] Nongenericity of Ω-Stability, Proceedings of Symposia in Pure Mathematics, vol. XIV, (1970), 5-8.

Alexander, J. C. and York, J. A. [1] Global Bifurcation of periodic orbits. Ann. of Math. (to appear).

Andreichikov, I. P. and Yudovich, V. I. [1] On auto-oscillatory regimes branching out from the Poisuille flow in a plane channel, Sov. Math. Dokl., 13 (1972), 791-794.

Andronov, A. A. and Pontriagin [1] Coarse Systems, Dokl. Akad. Nauk SSSR, 14 (1937), 247-251.

Andronov, A. A. and Chaikin, C. E. [1] "Theory of Oscillations", Princeton University Press (1949). Translation of 1937 Russian edition. Second edition (1959), in Russian by Andronov, Witt and Chaikin, English Translation, Pergamon Press, New York (1966).

Andronov, A. A., Leontovich, E. A., Gordon, I. I. and Maier, A. G. [1] "Qualitative Theory of Second Order Dynamic Systems", Halsted Press, New York (1973).

[2] "Theory of Bifurcations of Dynamic Systems on a Plane", Halsted Press, New York (1973).

Andronov, A. A. and Witt, A. [1] Sur la theórie mathematiques des autooscillations, C. R. Acad. Sci. Paris 190 (1930), 256-258.

Antman, P. and Keller, J. [1] "Bifurcation Theory and Nonlinear Eigenvalue Problems", Benjamin (1969).

Arnold, V. I. [1] "Ordinary Differential Equations", M.I.T. Press (1973).

[2] Lectures on bifurcation and versal families, Russian Math. Surveys 27 (1972), 54-123.

[3] Singularities of Smooth Mappings, Russian Math. Surveys, 23 (1968), 1-43.

[4] Remarks on the Stationary Phase Method and Coxete Numbers, Russian Math. Surveys, 29 (1974), 19-48.

[5] Sur la geometrié differentielle des groupes de Lie de dimension infinie et ses applications à l'hydrodynamique des fluids parfaits, Ann. Inst. Grenoble 16 (1) (1966), 319-361.

Arnold, V. I. and Avez, A. [1] "Ergodic Problems in Classical Mechanics", Benjamin (1970).

Aronson, D. G. [1] Stability for nonlinear parabolic equations via the Maximum Principle (to appear).

[2] A Comparison Method for Stability Analysis of Nonlinear Parabolic Equations (to appear).

Aronson, D. G. and Thames, H. D. Jr. [1] Stability and Oscillation in Biochemical Systems with Localized Enzymes, Arch. Rat. Mech. and Anal. (to appear).

Aronson, D. G. and Weinberger, H. [1] Nonlinear diffusion in population genetics, combustion and nerve propagation, Proc. Tulane Program in Partial Differential Equations, Springer Lecture Notes (to appear).

Auslander, D. G. and Huffaker, C. [1] Dynamics of interacting populations, J. Frank. Inst. (1974), 297 (5).

Ball, J. M. [1] Continuity properties of nonlinear semigroups, J. Funct. An. 17 (1974), 91-103.

[2] Measurability and Continuity Conditions for Nonlinear Evolutionary Processes, Proc. A.M.S. (to appear).

[3] Saddle Point Analysis for an Ordinary Differential Equation in a Banach Space, and an application to dynamic buckling of a beam, in "Nonlinear Elasticity", Dixon, ed. Academic Press, New York (1974).

Baserga, R. (ed.) [1] "The Cell Cycle and Cancer", Marcel Dekker, New York (1971).

Batchelor, G. K. [1] "The Theory of Homogeneous Turbulence", Cambridge University Press (1953).

Bautin, N. N. [1] On the number of limit cycles which appear with the variation of coefficients from an equilibrium of focus or center type, Transl. A.M.S. (1954), #100.

Beddington, J. C. and Free, A. [1] Age structure, density dependence and limit cycles in predator-prey interactions, J. Theoret, Popul. Biol. (to appear).

Bell, G. I. [1] Predator-prey equations simulating an immune response, Math. Biosci. 16 (1973), 291-314.

Bellman, R. [1] "Stability Theory of Differential Equations, McGraw Hill, New York (1953), Dover (1969).

Berger, M. [1] On Von Karman's Equations and the Buckling of a Thin Elastic Plate, Comm. Pure and Appl. Math., 28 (1967), 687-719, 21 (1968), 227-241.

Birkhoff, G. [1] "Hydrodynamics; a Study in Logic, Fact and Similitude", Princeton University Press (1950).

Birkhoff, G. O. [1] "Dynamical Systems", A.M.S. Colloquim Publ. (1927).

Bochner, S. and Montgomery, D. [1] Groups of differentiable and real or complex analytic transformations, Ann. of Math. 46 (1945), 685-694.

Bonic, R. and Frampton, J. [1] Smooth functions on Banach manifolds, J. Math. Mech. 16 (1966), 877-898.

Bogoliouboff, N. and Mitropolski, Y. A. [1] "Les methodes Asymptotiques en Théorie des Oscillations non Linéares", Paris: Gunthier-Villars (1962).

Bourbaki, N. [1] "Elements of Mathematics, General Topology Part 2", Hermann, Paris and Addison-Wesley, Reading, Mass. (1966).

Bourguignon, J. P. and Brezis, H. [1] Remarks on the Euler Equation, J. Funct. An. 15 (1974), 341-363.

Bowen, R. and Ruelle, D. [1] The ergodic theory of axiom A flows, Inv. Math. (to appear).

Brauer, F. and Nohel, J. A. [1] "Qualitative Theory of Ordinary Differential Equations", Benjamin, New York (1969).

Bruslinskaya, N. N. [1] Qualitative integration of a system of n differential equations in a region containing a singular point and a limit cycle, Dokl. Akad. Nauk. SSSR 139 (1961), 9-12, Sov. Math. Dokl. 2 (1961), 9-12.

[2] On the behavior of solutions of the equations of hydrodynamics when the Reynolds number passes through a critical value, Dokl. Akad. Nauk. SSSR, 162 (1965), 731-734.

[3] The origin of cells and rings at near-critical Reynolds numbers, Uspekhi Mat. Nauk. 20 (1965), 259-260, (Russian).

Cantor, M. [1] Perfect Fluid Flows over R^n with Asymptotic Conditions, J. Funct. An. 18 (1975), 73-84.

Carroll, R. [1] "Abstract Methods in Partial Differential Equations", Harper and Row (1969).

Cesari, L. [1] "Asymptotic Behavior and Stability Problems in Ordinary Differential Equations", Springer-Verlag, New York (1973).

Chafee, N. [1] The bifurcation of one or more closed orbit from an equilibrium point of an autonomous differential system, J. Diff. Eq. 4 (1968), 661-679.

[2] A bifurcation problem for a functional differential equation of finitely retarded type, J. Math. An. and Appl. 35 (1971), 312-348.

Chandresekar, S. [1] "Hydrodynamic and Hydromagnetic Stability", Oxford University Press (1961).

Chen, T. S. and Joseph, D. D. [1] Subcritical bifurcation of plane Poiseuille flow, J. Fluid Mech. 58 (1973), 337-351.

Chernoff, P. [1] A note on continuity of semigroups of maps (to appear).

Chernoff, P. and Marsden, J. [1] "Properties of Infinite Dimensional Hamiltonian Systems", Springer Lecture Notes #425, (1974).

[2] On continuity and smoothness of group actions, Bull. Am. Math. Soc. 76 (1970), 1044.

Choquet, G. [1] "Lectures on Analysis", (3 vols.), W. A. Benjamin (1969).

Chorin, A. J. [1] Numerical Study of Slightly Viscous Flow, Jour. Fluid Mech. 57 (1973), 785-796.

[2] "Lectures on Turbulence Theory", Publish or Perish, Boston, Mass. (1975).

Chow, S. N. and Mallet-Paret, J. [1] Integral Averaging and Bifurcation, to appear, Journal of Differential Equations.

Cohen, D. [1] Multiple Solutions and Periodic Oscillations in Nonlinear Diffusion Processes, SIAM J. on Appl. Math. 25 (1973), 640-654.

Cohen, D. and Keener, J. P. [1] Oscillatory Processes in the Theory of Particulate Formation in Supersaturator Chemical Solutions, SIAM J. Appl. Math. (to appear).

Cole, J. D. [1] "Perturbation Methods in Applied Mathematics", Blaisdell (1968).

Coles, D. [1] Transition in circular Couette flow, J. Fluid Mech. 21 (1965), 385-425.

Cooke, K. L. and Yorke, J. A. [1] Some equations modelling growth processes and gonorrhea epidemics, Math. Biosci. 16 (1973), 75-101.

Crandall, M. and Rabinowitz, P. [1] Bifurcation from simple eigenvalues, J. Funct. An. 8 (1971), 321-340.

[2] Bifurcation, perturbation of simple eigenvalues and linearized stability, Arch. Rat. Mech. An. 52 (1974), 161-180.

Cronin, J. [1] One-side bifurcation points, J. Diff. Eq. 9 (1971), 1-12.

Dajeckii, Ju. L. and Krein, M. G. [1] "Stability of Solutions of Differential Equations in Banach Spaces", A.M.S. Translations of Math. Monographs, 43 (1974).

Davey, A., DiPrima, R. C. and Stuart, J. T. [1] On the instability of Taylor vortices, J. Fluid Mech. 31 (1968), 17-52.

Desoer, C. and Kuh, E. [1] "Basic Circuit Theory", McGraw-Hill, New York (1969).

Dorroh, J. R. [1] Semi-groups of maps in a locally compact space, Canadian J. Math. 19 (1967), 688-696.

Dorroh, J. R. and Marsden, J. E. [1] Smoothness of nonlinear semigroups, (to appear).

Dunford, N. and Schwartz, J. [1] "Linear Operators", Vol. I, Interscience (1958).

[2] "Linear Operators", Vol. II, New York, Wiley (1963).

Durand, G. [1] Application de la theorie de la bifurcation et de la stabilité aux equations du champ magnetique terrestre, Lecture Notes #128, Univ. de Paris XI, Orsay (1975).

Ebin, D. G. [1] Espace des metriques Riemanniennes et mouvement des fluides via les varietes d'applications, Lecture Notes, Ecole Polytechnique, et Université de Páris VII (1972).

Ebin, D. G. and Marsden, J. [1] Groups of diffeomorphisms and the motion of an incompressible fluid, Ann. of Math. 92 (1970), 102-163.
(see also Bull. Am. Math. Soc. 75 (1969), 962-967.)

Fenichel, N. [1] The Orbit Structure of the Hopf Bifurcation Problem, J. Diff. Eqns. 17 (1975), 308-328.

[2] Center manifolds and the Hopf bifurcation problem (preprint).

Fife, P. and Joseph D. [1] Existence of convective solutions of generalized Bénard problems, Arch. Rat. Mech. An. 33 (1969), 116-138.

Freedman, H. I. [1] On a bifurcation theorem of Hopf and Friedrichs (to appear).

Friedman, A. [1] "Partial Differential Equations", Holt, New York (1969).

Friedrichs, K. O. [1] "Advanced Ordinary Differential Equations", New York, Gordon and Breach (1965).

[2] "Advanced Ordinary Differential Equations", Springer (1971).

Fujita, H. and Kato, T. [1] On the Navier-Stokes Initial Value Problem, Arch. Rat. Mech. Anal. 16 (1964), 269-315.

Gavalas, G. R. [1] "Nonlinear Differential Equations of Chemically Reacting Systems", New York, Springer (1968).

Glansdoff, P. and Prigogine, I. [1] "Thermodynamic Theory of Structure, Stability and Fluctuations", New York, Wiley-Interscience (1971).

Glass, L. and Kauffman, S. A. [1] The logical analysis of continuous, nonlinear biochemical control networks, J. Theor. Biol. 39 (1973), 103-129.

Goodwin, B. C. [1] Oscillatory Behavior in Enzymatic Control Processes, in "Advances in Enzyme Regulation", Vol. 3, G. Weber (ed.), Pergamon (1965), 425-438.

Greenberg, J. M. and Hoppensteadt, F. [1] Asymptotic Behavior of Solutions to a Population Equation, SIAM J. Appl. Math. 28 (1975), 662-674.

Guckenheimer, J. [1] Review of "Stabilité Structurelle et Morphogénèse" by R. Thom., Bull. A.M.S. 79 (1973), 878-890.

Guckenheimer, J., Oster, G., and Ipaktchi, A. [1] The Dynamics of Density Dependent Population Models, (preprint).

Gurel, O. [1] Dynamics of Cancerous Cells, Cancer 23 (1969), 497-505.

Gurel, O. [2] Qualitative Study of Unstable Behavior of Cancerous Cells, Cancer 24 (1969), 945-947.

[3] Limit Cycles with Stability of the First Level, J. Franklin Inst. 288 (1969), 235-238.

[4] Biomolecular Topology and Cancer, Physiol. Chem. & Physics 3 (1971), 371-388.

[5] Global Studies of Orbit Structures of Biomolecular Dynamical Systems, Collective Phenomena 1 (1972), 1-4.

[6] Bifurcation Theory in Biochemical Dynamics, Analysis and Simulation - North-Holland - Amsterdam (1972).

[7] Bifurcation Models of Mitosis, Physiol. Chem. & Physics 4 (1972), 139-152.

[8] A Classification of the Singularities of (X, f), Mathematical Systems Theory, 7 (1973), 154-163.

[9] Topological Dynamics in Neurobiology, Intern. J, Neuroscience 6 (1973), 165-179.

[10] Bifurcations in Nerve Membrane Dynamics, Intern. J. Neuroscience 5 (1973), 281-286.

[11] Peeling and Nestling of A Striated Singular Point, Collective Phenomena 2 (1974), 000-000.

[12] Limit cycles and Bifurcations in Biochemical Dynamics, Biol. Systems (to appear).

[13] Partial Peeling, Proc. Lefschetz Conf., Brown University (1974) (to appear).

Gurel, O. and Lapidus, L. [1] Liapunov Stability Analysis of Systems with Limit Cycle, Chem. Eng. Symp. Ser. 61, #55 (1965), 78-87.

[2] A Guide to The Generation of Liapunov Functions, Industrial and Engineering Chemistry, March (1969), 30-41.

Gurtin, M. and MacCamy, R. [1] Non-linear age-dependent population dynamics, Arch. Rat. Mech. An. (1974), 281-300.

Haag, J. [1] "Les mouvements Vibratoires", Paris, Presses Univ. de France I, II (1955).

Haag, J. and Chaleant, R. [1] "Problèmes de Théorie Générale des Oscillations et de Chronométrie", Paris, Gunter-Villars (1960).

Hale, J. K. [1] Integral manifolds of perturbed differential systems, Ann. Math. 73 (1961), 496-531.

[2] "Oscillations in Nonlinear Systems", McGraw-Hill, (1963).

[3] "Ordinary Differential Equations", New York, Wiley-Interscience (1969).

Hale, J. K. and LaSalle, J. P. (eds.) [1] "Differential Equations and Dynamical Systems", Academic Press (1967).

Hall, W. S. [1] The bifurcation of solutions in Banach spaces, Trans. Am. Math. Soc. 161 (1971), 207-218.

Hanusse, P. [1] De l'existence d'un cycle limite dans l'evolution des systemes chimiques ouverts, C. R. Acad. Sci. Paris 274, Series C (1972), 1245-1247.

Hartman, P. [1] "Ordinary Differential Equations", Second Edition, P. Hartman (1973).

Hassell, M. and May, R. [1] Stability in insect host-parasite models, J. Animal Ecology 42 (1973), 693-726.

Hastings, S. P. [1] Some Mathematical Problems from Neurobiology, Am. Math. Monthly 82 (1975), 881-894.

Hastings, S. P. and Murray, J. D. [1] The existence of oscillatory solutions in the Field-Noyes Model for the Belousob-Zhabotinskii Reaction, SIAM J. Appl. Math. 28 (1975), 678-688.

Hastings, S. P., Tyson, J. and Webster, D. [1] Existence of Periodic Solutions for Negative Feedback Cellular Control Systems (preprint).

Hearon, J. Z. [1] The kinetics of linear systems with special reference to periodic reactions, Bull. Math. Biophysics 15 (1953), 121-141.

Henrard, J. [1] Liapunov's center theorem for a resonant equilibrium, J. Diff. Eq. 14 (1973), 431-441.

Henry, D. [1] "Geometric Theory of Semilinear Parabolic Equations", Mimeographed, Univ. of Kentucky (1974).

Higgins, J. [1] A Chemical Mechanism for Oscillations of Glycolytic Intermediates in Yeast Cells, Proc. N.A.S., 51 (1964), 988-994.

[2] The Theory of Oscillatory Reactions, Ind. & Eng. Chem. 59 (1967), 19-62.

Hille, E. and Phillips, R. [1] "Functional Analysis and Semigroups", Vol. 31 AMS Colloq. Publ. (1957).

Hirsch, M. and Pugh, C. [1] Stable manifolds and hyperbolic sets, Proc. Symp. Pure Math. XIV, Am. Math. Soc. (1970), 133-163.

Hirsch, M. and Pugh, C. and Schub, M. [1] "Invariant Manifolds", Springer Lecture Notes (to appear).

Hirsch, M. and Smale, S. [1] "Differential Equations, Dynamical Systems and Linear Algebra", New York, Academic Press (1974).

Hodgkin, A. L. and Huxley, A. F. [1] A Quantitative Description of Membrane Current and its Application to Conduction and Excitation in Nerve, J. Physiol. 117 (1952), 500-544.

Hopf, E. [1] Abzweigung einer periodischen Losung von einer stationaren Losung eines Differentialsystems, Ber. Math-Phys. Sachsische Adademie der Wissenschaften Leipzig 94 (1942), 1-22.

[2] A mathematical example displaying the features of turbulence, Comm. Pure Appl. Math. 1 (1948), 303-322.

[3] Uber die Anfanswert-aufgabe fur die hydrodynamische Grundgleichungen, Math. Nachr. 4 (1951), 213-231.

[4] The partial differential equation $u_t+uu_x = \mu u_{xx}$, Comm. Pure. Appl. Math. 3 (1950), 201-230.

[5] Repeated branching through loss of stability, an example, Proc. Conf. on Diff. Equations, Univ. of Maryland (1955).

[6] Remarks on the functional-analytic approach to turbulence, Proc. Symps. Appl. Math., XIII, Amer. Math. Soc. (1962), 157-163.

[7] On the right weak solution of the Cauchy problem for a quasi-linear equation of first order, J. Math. Mech. 19 (1969/1970), 483-487.

Hsü, I. and N. D. Kazarinoff [1] An applicable Hopf bifurcation formula and instability of small periodic solutions of the Field-Noyes model, J. for Math. Anal. and Appl. (to appear).

[2] Existence and stability of periodic solutions of a third order nonlinear autonomous system simulating immune response in animals (preprint).

Hughes, T. and Marsden, J. [1] "A Short Course in Fluid Mechanics", Publish or Perish (1976).

Iooss, G. [1] Contribution a la theorie nonlineare de la stabilite des ecoulements laminaires, These, Faculte des Sciences, Paris VI (1971).

[2] Theorie non linearire de la stabilite des ecoulements laminaires dans le cas de <<l'echange des stabilites >>, Arch. Rat. Mech. An. 40 (1971), 166-208.

[3] Existence de stabilite de la solution periodique secondaire intervenant dans les problemes d'evolution du type Navier-Stokes, Arch. Rat. Mech. An. 49 (1972), 301-329.

[4] Bifurcation d'une solution T-periodique vers une solution nT-periodique, pour certains problèmes d'evolution du type Navier-Stokes, C. R. Acad. Sc. Paris 275 (1972), 935-938.

[5] "Bifurcation et Stabilite", Lecture Notes, Université Paris XI (1973).

[6] Bifurcation of a periodic solution into an invariant torus for Navier-Stokes equations and their respective stabilities, Arch. Rat. Mech. An. (to appear).

Irwin, M. C. [1] On the stable manifold theorem, Bull. London Math. Soc. 2 (1970), 196-198.

Ize, J. [1] Thesis, New York Univeristy (1975).

Joseph, D. D. [1] Stability of convection in containers of arbitrary shape, J. Fluid Mech. 47 (1971), 257-282.

[2] Response curves for plane Pouseuille flow. In Advances in Applied Mechanics, Vol. XIV, (ed. C. S. Yih), New York, Academic Press (1974).

[3] Repeated supercritical branching of solutions arising in the variational theory of turbulence, Arch. Rat. Mech. Anal. 53 (1974), 101-130.

[4] "Global Stability of Fluid Motions", Springer (to appear).

Joseph, D. D. and Chen, T. S. [1] Friction factors in the theory of bifurcating flow through annular ducts. J. Fluid Mech. 66 (1974), 189-207.

Joseph, D. D. and Nield, D. A. [1] Stability of Bifurcating Time-periodic and Steady Solutions of Arbitrary Amplitude, Archive for Rat. Mech. and An. (to appear).

Joseph, D. D. and Sattinger, D. H. [1] Bifurcating time periodic solutions and their stability, Arch. Rat. Mech. An 45 (1972), 79-109.

Jost, R. and Zehnder, E. [1] A generalization of the Hopf bifurcation theorem, Helv. Phys. Acta 45 (1972), 258-276.

Judovich, V. I. [1] Periodic motions of a viscous incompressible fluid, Sov. Math. Dokl. 1 (1960), 168-172.

[2] Nonstationary flows of an ideal incompressible fluid, Z. Vycis 1. Mat. i, Fiz. 3 (1963), 1032-1066.

[3] Two-dimensional nonstationary problem of the flow of an ideal incompressible fluid through a given region, Mat. Sb. N. S. 64 (1964), 562-588.

[4] Example of the generation of a secondary stationary or periodic flow when there is a loss of stability of the laminar flow of a viscous incompressible fluid, Prikl. Math. Mek. 29 (1965), 453-467.

[5] Stability of stress flows of viscous incompressible fluids, Dokl. Akad. Nauk. SSSR 16 (1965), 1037-1040 (Russian), Soviet Phys. Dokl. 104 (1965), 293-295 (English).

[6] On the origin of convection, Prikl. Mat. Mech. (J. Appl. Math. Mech.) 30 no. 6 (1966), 1193-1199.

[7] Secondary flows and fluid instability between rotating cylinders, Prikl. Mat. Mech. (J. Appl. Math. Mech.) 30 (1966A), 688-698.

[8] On the stability of forced oscillations of fluid, Soviet Math. Dokl. 11 (1970), 1473-1477.

[9] On the stability of self-oscillations of a liquid, Soviet Math. Dokl. 11 (1970), 1543-1546.

[10] On the stability of oscillations of a fluid, Dokl. Akad. Nauk. SSSR 195 (1970), 292-295 (Russian).

[11] The birth of proper oscillations in a fluid, Prikl. Math. Mek. 35 (1971), 638-655.

Kato, T. [1] Integration of the equations of evolution in a Banach space, J. Math. Soc. Japan 5 (1953), 208-234.

[2] Abstract evolution equations of parabolic type in Banach and Hilbert space, Nagoya Math. J. 19 (1961), 93-125.

[3] "Perturbation Theory for Linear Operators", Springer-Verlag, New York (1966).

[4] Linear evolution equations of "hyperbolic" type, J. Fac. Sci. Univ. of Tokyo, Sec. 1. XVII (1970), 241-258.

Kato, T. [5] Linear evolution equations of "hyperbolic" type II, J. Math. Soc. Japan 25 (1973), 648-666.

[6] On the initial value problem for quasi-linear symmetric hyperbolic systems, Arch. Rat. Mech. 58 (1975), 181-206.

Kato, T. and Fujita, H. [1] On the nonstationary Navier-Stokes system, Rendiconti Sem. Mat. Univ., Padova, 32 (1961), 243-260.

Keener, J. P. and Keller, H. B. [1] Perturbed Bifurcation Theory, Arch. Rat. Mech. Anal. 50 (1973), 159-175.

Keller, J. [1] Bifurcation theory for ordinary differential equations, in "Bifurcation Theory and Non-linear Eigenvalue Problems", ed. J. Keller and S. Antman, Benjamin (1969).

Kelley, A. [1] The stable, center-stable, center, center-unstable, and unstable manifolds, Appendix C of "Transversal Mappings and Flows by R. Abraham and J. Robbin, Benjamin, New York (1967). (See also J. Diff. Eqns. 3 (1967), 546-570.)

[2] On the Liapunov sub-center manifold, Appendix C of "Foundations of Mechanics" by R. Abraham, Benjamin, New York (1967).

Kielhöfer, H. [1] Stability and semi-linear evolution equations in a Hilbert space, Arch. Rat. Mech. Anal. 57 (1974), 150-165.

Kirchgässner,, K. [1] Die Instabilität der strömmung zwischen rotierenden Zylindern gegenüber Taylor-Wirbeln fur beliebige Spaltbreiten, Zeit, Angew. Math. Phys. 12 (1961), 14-30.

[2] "Multiple Eigenvalue Bifurcation for Holomorphic Mappings", Contributions to Nonlinear Functional Analysis, Academic Press (1971).

Kirchgässner, K. and Kielhöfer, H. [1] Stability and bifurcation in fluid dynamics, Rocky Mountain J. of Math. 3 (1973), 275-318.

Kirchgässner, K. and Sorger, P. [1] Stability analysis of branching solutions of the Navier-Stokes equations, Proc. 12th Int. Cong. Appl. Mech., Standord Univ., August, 1968.

[2] Branching analysis for the Taylor problem, Quart. J. Mech. Appl. Math. 22 (1969), 183-210.

Knops, R. J. and Wilkes, E. W. [1] Theory of Elastic Stability, Handbuch der Physik, Vol. V/a/3 (1973), 125-302.

Kogelman, S. and Keller, J. B. [1] Transient behavior of unstable nonlinear systems with application to the Benard and Taylor Problem, SIAM J. on Appl. Math. 20 (1971), 619-637.

Kolomogorov, A. N. [1] Sulla teoria di volterra della lotta per l'Esisttenza, Giorn. Instituto Ital. Attuari 1 (1936), 74-80.

[2] The local structure of turbulence in incompressible viscous fluid for very large Reynolds numbers, C. R. Acad. Sci. USSR 30 (1941), 301.

[3] Dissipation of energy in locally isotropic turbulence, C. R. Acad. Sci. USSR 32 (1941), 16.

Kopell, N. and Howard, L. N. [1] Horizontal bands in the Belousov reaction, Science 180 (1973), 1171-1173.

[2] Plane wave solutions to reaction-diffusion equations, Studies in Appl. Math. 52 (1973), 291-328.

[3] Bifurcations under non-generic conditions, Adv. in Math. 13 (1974), 274-283.

[4] Wave trains, shock structures, and transition layers in reaction-diffusion equations, in "Mathematical Aspects of Chemical and Biochemical Problems and Quantum Chemistry", Proc. SIAM-AMS Symposium 8 (1974), 1-12.

[5] Pattern formation in the Belousov reaction, in "Lectures on Mathematics in the Life Sciences" AMS, Vol. 7 (1974), 201-216.

[6] Bifurcations and Trajectories joining critical points (preprint).

Kraichnan, R. H. [1] The structure of turbulence at very high Reynolds numbers, J. Fluid Mech. 5 (1959), 497-543.

[2] The closure problem of turbulence theory, Proc. Symp. Appl. Math. XIII, Am. Math. Soc. (1962), 199-225.

[3] Isotropic turbulence and inertial range structures, Phys. Fluids 9 (1966), 1728-1752.

[4] On Kolmogorov's inertial-range theories, J. Fluid Mech. 62 (1974), 305-330.

[5] Remarks on turbulence theory, Advances in Math., 16 (1975), 305-331.

Kryloff, N. and Bogoluiboff, N. [1] "Introduction to Nonlinear Mechanics", Annals of Math. Studies #11, Princeton (1947).

Kurzweil, J. [1] Exponentially stable integral manifolds, averaging principle and continuous dependence on a parameter, (I, II), Czech. Math. J. 16 (91) (1966), 380-

Ladyzhenskaya, O. A. [1] "The Mathematical Theory of Viscous Incompressible Flow" (2nd Edition), Gordon and Breach, New York (1969).

[2] Example of nonuniqueness in the Hopf class of weak solutions for the Navier-Stokes equations, Math. USSR-Izvestija 3 (1969), 229-236.

[3] Mathematical Analysis of Navier-Stokes Equations for Incompressible Liquids, Annual Review of Fluid Mech. 7 (1975), 249-272.

Landau, L. D. and Lifshitz, E. M. [1] "Fluid Mechanics", Addison-Wesley, Reading, Mass. (1959).

Lanford, O. E. [1] Bifurcation of periodic solutions into invariant tori: the work of Ruelle and Takens, in "Nonlinear Problems in the Physical Sciences and Biology", Springer Lecture Notes #322 (1973).

[2] The Lorenz Attractor (in preparation).

Lang, S. [1] "Real Analysis", Addison-Wesley, Reading, Mass. (1969).

Langer (ed.) [1] "Nonlinear Problems", Univ. of Wisconsin Press (1962).

LaSalle, J. P. and Lefschetz, S. (ed.) [1] "Nonlinear Differential Equations and Nonlinear Mechanics", Academic Press, New York (1963).

[2] "Stability by Lyapunov's Direct Method with Applications", Academic Press, New York (1961).

Lasota, A. and Yorke, J. A. [1] Bounds for periodic solutions of differential equations in Banach spaces, J. Diff. Eq. 10 (1971), 83-91.

Lefever, R. and Nicolis, G. [1] Chemical Instabilities and Sustained Oscillations, J. Theoret. Biol. 30 (1971), 267-284.

Lefschetz, S. [1] "Contributions to the Theory of Nonlinear Oscillations", Princeton Univ. Press (1950).

[2] "Differential Equations: Geometric Theory" (2nd Edition), Interscience, New York (1963).

Leray, Jean [1] Etude de diverses equations integrales non-linearies et de qualques problemes que pose l'hydrodynamique, Jour. Math. Pures, Appl. 12 (1933), 1-82.

[2] Essai sur les mouvements plans d'un liquide vesqueux que limitent des parois, J. de Math. 13 (1934), 331-418.

[3] Sur le mouvement d'un liquide visqueux emplissant l'espace, Acta Math 63 (1934), 193-248.

[4] Problemes non-lineaires, Ensign, Math. 35 (1936), 139-151.

Levin, S. [1] Dispersion and population interactions, American Naturalist (to appear).

Li, T. Y. and Yorke, J. A. [1] Period three implies chaos, Am. Math. Monthly (to appear).

Liapunov, M. A. [1] "Problème générale de la stabilité du mouvement", Annals of Math. Studies 17, Princeton (1949).

Lichtenstein, L. [1] "Grundlagen Der Hydromechanik", Verlag Von Julius Springer, Berlin (1929).

Likova, O. B. [1] On the behavior of solutions of a system of differential equations in the neighborhood of an isolated constant solution, Ukrain. Math. Zh. IX (1957), 281-295 (in Russian).

[2] On the behavior of solutions of a system of differential equations in the neighborhood of closed orbits, Ukrain. Mat. Zh. IX (1957), 419-431 (in Russian).

Lin, C. C. [1] "The Theory of Hydrodynamic Stability", Cambridge University Press (1955).

Lorenz, E. N. [1] Deterministic Nonperiodic Flow, Journal of the Atmospheric Sciences, 20 (1963), 130-141.

Marsden, J. E. [1] Hamiltonian one parameter groups, Arch. Rat. Mech. An 28 (1968), 362-396.

[2] The Hopf bifurcation for nonlinear semigroups, Bull. Am. Math. Soc. 79 (1973), 537-541.

[3] On Product Formulas for Nonlinear Semigroups, J. Funct. An. 13 (1973), 51-72.

[4] "Applications of Global Analysis in Mathematical Physics", Publish or Perish, Boston (1974).

[5] A formula for the solution of the Navier-Stokes equations based on a method of Chorin, Bull. A.M.S. 80 (1974), 154-158.

Marsden, J. and Abraham, R. [1] Hamiltonian mechanics on Lie groups and hydrodynamics, Proc. Pure Math XVI, Amer. Math. Soc. (1970), 237-243.

Marsden, J., Ebin, D., and Fischer, A. [1] Diffeomorphism groups, hydrodynamics, and relativity, Proc. 13th biennial seminar of Canadian Math. Congress, ed. J. R. Vanstone, Montreal (1970), 135-279.

Marsden, J. and McCracken, M. [1] A Product Formula for the Navier-Stokes Equations based on a method of Chorin (in preparation).

Masuda, K. [1] On the Analyticity and the Unique Continuation Theorem for Solutions of the Navier-Stokes Equation, Proc. Japan Acad. 43 (1967), 827-832.

Matkowsky, B. J. [1] A simple nonlinear dynamic stability problem, Bull. A.M.S. 76 (1970), 620-625.

May, R. M. [1] Limit cycles in predator-prey communities, Science 177 (1972), 900-902.

[2] Biological populations with non-overlapping generations: stable points, stable cycles, and chaos, Science (to appear).

McCracken, M. F. [1] Computation of stability for the Hopf bifurcation theorem and the Lorenz equations (preprint).

[2] The Stokes Equation in L_p, Thesis, Berkeley (1975).

McLaughlin, J. B. and Martin, P. C. [1] Transition to turbulence of a statically stress fluid, Phys. Rev. Letters 33 (1974), 1189-1892.

[2] Transition to turbulence in a statically stressed fluid (preprint).

McLeod, J. B. and Sattinger, D. H. [1] Loss of stability and bifurcation at a double eigenvalue, J. Funct. An. 14 (1973), 62-84.

Minorsky, N. [1] "Nonlinear Oscillations", Van Nostrand, Princeton (1962), (Reprinted, R. E. Krieger, Huntington, New York (1974).)

Mitropolsky, Y. A. and Likova, O. B. [1] "Lectures on the Method of Integral Manifolds", Institute of Mathematics of the Ukrainian Academy of Sciences, Kiev (1968).

Morrey, C. B., Jr. [1] "Multiple Integrals in the Calculus of Variations", Springer (1966).

Moulton, F. [1] "An Introduction to Celestial Mechanics", Macmillan, New York (1902).

Naimark, J. [1] On Some Cases of Periodic Motions Depending on Parameters, Dokl. Akad. Nauk SSR 129 (1959), 736-739.

[2] Motions closed to doubly asymptotic motions, Soviet Math. Dokl. 8 (1967), 228-231.

Newhouse, S. E. [1] On Simple Arcs between Structurally Stable Flows, Proc. Liverpool Symposium on Dynamical Systems, Springer Lect. Notes.

[2] Nondensity of Axiom A(a) on S^2, Proceedings of Symposia in Pure Mathematics, Vol. XIV, (1970), 191-202.

Newhouse, S. E. and Palis, S. [1] Cycles and Bifurcation Theory (preprint).

Newhouse, S. E. and Peixoto, M. M. [1] There is a Simple Arc Joining any Two Morse-Smale Flows (preprint). (See also Peixoto [1], p. 303).

Nicholson, A. J. [1] An outline of the dynamics of animal populations, Aust. J. Zool. 2 (1954), 9-65.

[2] The self adjustment of populations to change, in "Cold Spring Harbor Symposia on Quantitative Biology", 22 (1957), 153-173.

Nirenberg, L. [1] "Topics in Nonlinear Analysis", Courant Institute Lecture Notes (1974).

Noyes, R. M., Field, R. J. and Körös, E. [1] Oscillations in chemical systems, J. Am. Chem. Soc. 94 (1972), 1394-1395, 8649-8664, 96 (1974), 2001.

Nussbaum, R. D. [1] A Global Bifurcation Theorem with Applications to Functional Differential Equations, J. Funct. An. 19 (1975), 319-338.

Orszag, S. A. [1] Analytical theories of turbulence, J. Fluid Mech. 41 (1970), 363-386.

Oster, G. and Auslander, D. [1] Deterministic and stochastic effects in population dynamics, Sixth Triennial World Congress Int'l. Fed. Automat. Control (1974).

Oster, G. and Takahashi, Y. [1] Models for age specific interactions in a periodic environment, Ecological Monographs (to appear).

Othmer, H. and Scriven, L. [1] Instability and dynamic pattern in cellular networks, J. Theoret. Biol. 32 (1971), 507-537.

Painlevé, P. [1] Gewöhnliche Differentialgleichungen: Existenz der Lösungen, Encyklopädie der Mathematischen Wissenschaften IIA4a.

[2] Les petit mouvements périodiques des systems, Comptes Rendus Paris, XXIV (1897), 1222.

Peixoto, M. M. (ed.) [1] "Dynamical Systems", Academic Press (1973).

Pimbley, G. [1] Periodic solutions of predator-prey equations simulating an immune response, I. Math. Biosci. 20 (1974), 27-51.

Pliss, V. A. [1] "Nonlocal Problems in the Theory of Oscillations", Academic Press, New York (1966).

Poincare, H. [1] "Les Méthodes Nouvelles de la Mécanique Céleste", Vol. I Paris (1892).

[2] Sur les courbes définie par une équation différentielle, C. R. Acad. Sci. 90 (1880), 673-675.

Ponomarenko, T. B. [1] Occurrence of space-periodic motions in hydrodynamics, J. Appl. Math. Mech. 32 (1968), 40-51, 234-245.

Poore, A. B. [1] A model equation arising in chemical reactor theory, Arch. Rat. Mech. Anal. 52 (1973), 358-388.

[2] On the Theory and Application of the Hopf-Friedrichs Bifurcation Theory, Arch. Rat. Mech. An. (to appear).

[3] On the dynamical behavior of the two temperature feedback nuclear reactor model, SIAM J. Appl. Math. (to appear).

Prigogine, I. and Lefever, R. [1] On symmetry breaking instabilities in dissipative systems, J. Chem. Phys. 46 (1967), 3542, 48 (1968), 1695.

Prigogine, I. and Nicolis, G. [1] Biological Order, Structure and Instabilities, Quarterly Rev. Biophys. 4 (1971), 107-148.

Pyrtli, A. S. [1] The birth of complex invariant manifolds near a singular point of a vector field which depends on parameters, Funct. An. Appl. 6 (1969), 1-6.

Rabinowitz, P. A. [1] Existence and nonuniqueness of rectangular solutions of the Benard problem, Arch. Rat. Mech. An. 29 (1967), 30-57.

[2] Some global results for non-linear eigenvalue problems, J. Funct. Anal. 7 (1971), 487-513.

Rayleigh, Lord [1] On convective currents in a horizontal layer of fluid when the higher temperature is on the under side, Phil. Mag. 32 (1916), 529-546.

Renz, P. [1] Equivalent flows on smooth Banach manifolds, Indiana Univ. Math. J. 20 (1971), 695-698.

Reynolds, O. [1] On the dynamical theory of incompressible viscous fluids and the determination of the criterion, Phil. Trans. Roy. Soc. London A186 (1895), 123-164.

Roseau, M. [1] "Vibrations non Linéares et Théorie de la Stabilité", Springer Tracts in Nat. Phil. #8 (1966).

Rosenblat, M. and Van Atta, C. (ed.) [1] "Statistical Models and Turbulence", Springer Lecture Notes in Physics #12 (1972).

Rosenzweig, M. [1] Paradox of enrichment: destabilization of exploitation ecosystems in ecological time. Science 171 (1971), 385-387.

Rudin, W. [1] "Functional Analysis", McGraw-Hill, New York (1973).

Ruelle, D. [1] Dissipative systems and differential analysis, Boulder Lectures (1971).

[2] Strange attractors as a mathematical explanation of turbulence, in "Statistical Models and Turbulence", ed. by M. Rosenblatt and C. Van Atta, Springer-Verlag, Berlin-Heidelberg-New York (1972).

[3] Bifurcations in the presence of a symmetry group, Arch. Rat. Mech. An. 51 (1973), 136-152.

Ruelle, D. [4] A measure associated with an Axiom A attractor, Am. J. Math. (to appear).

[5] Some comments on Chemical Oscillations, Trans. New York Acad. Sci. 35 (1973), 66-71.

Ruelle, D. and Takens, F. [1] On the nature of turbulence, Comm. Math. Phys. 20 (1971), 167-192, 23 (1971), 343-344.

Sacker, R. [1] Thesis (unpublished).

Sather, D. [1] Branching of solutions of nonlinear equations, Rocky Mtn. J. 3 (1973), 203-250.

Sattinger, D. H. [1] On global solutions of nonlinear hyperbolic equations, Arch. Rat. Mech. An. 30 (1968), 148-172.

[2] Bifurcation of periodic solutions of the Navier-Stokes equations, Arch. Rat. Mech. An. 41 (1971), 66-80.

[3] The mathematical problem of hydrodynamic stability, J. Math. and Mech. 19 (1971), 797-817.

[4] Stability of bifurcating solutions by Leray-Schauder degree, Arch. Rat. Mech. An. 43 (1971), 154-166.

[5] "Topics in Stability and Bifurcation Theory", Springer Lecture Notes No. 309 (1973).

[6] Transformation groups and bifurcation at multiple eigenvalues, Bull. Am. Math. Soc. 79 (1973), 709-711.

[7] On the stability of waves of nonlinear parabolic systems, Adv. in Math. (to appear).

[8] Six Lectures on the Transition to Instability, Springer Lecture Notes #322 (1973), 261-287.

Schmidt, D. S. and Sweet, D. [1] A unifying theory in determining periodic families for Hamiltonian systems at resonance, J. Diff. Eq. 14 (1973), 597-609.

Segal, I. [1] Nonlinear semigroups, Ann. of Math. 78 (1963), 339-364.

Sel'kov, E. [1] Self-oscillations in glycose, Europe Jour. Biochem. 4 (1968), 79-86.

Sel'kov, E. E., Zhabotinsky, A. M., Shnoll, S. E. (Eds.) [1] "Oscillatory Processes in Biological and Chemical Systems", (Russian) Acad. Sciences, U.S.S.R. (1971).

Serrin, J. [1] "Mathematical Principles of Classical Fluid Dynamics", Encyclopedia of Physics, Vol. 8/1, Springer (1959).

[2] On the stability of viscous fluid motions, Arch. Rat. Mech. An. 3 (1959), 1-13.

[3] The initial value problem for the Navier-Stokes equations in "Non Linear Problems", ed. Langer, Univ. of Wisconsin Press (1962).

Shinbrot, M. [1] "Lectures on Fluid Mechanics", Gordon-Breach (1973).

Shub, M. [1] Topologically Transitive Diffeomorphisms of T^4, Symposium on Differential Equations and Dynamical Systems, Lecture Notes in Mathematics no. 206, 39-40.

Siegel, C. L. and Moser, J. [1] "Lectures on Celestial Mechanics", Springer (1971).

Siegmann W. L. and Rubenfeld, L. A. [1] A nonlinear model for double-diffusive convection, SIAM J. Appl. Math. 29 (1975), 540-557.

Smale, S. [1] Differentiable dynamical systems, Bull. Am. Math. Soc. 73 (1967), 747-817.

[2] On the mathematical foundations of electric circuit theory, J. Diff. Geom. 7 (1972), 193-210.

[3] A mathematical model of two cells via Turing's equation, Am. Math. Soc. Proceedings on Pure and Applied Math (to appear).

[4] Diffeomorphisms with many Periodic Points, Differential and Combinatorial Topology, Princeton Univ. Press, Princeton, N. J., 63-80.

Smale, S. and Williams, R. [1] The qualitative analysis of a difference equation of population growth (preprint).

Sobolewskii, P. E. [1] Equations of parabolic type in a Banach space, Trans. A.M.S. 49 (1965), 1-62.

Sotomayor, J. [1] Generic Bifurcations of Dynamical Systems, p. 561 of Peixoto [1]; see also Publ. IHES 43 (1974).

Spangler, R. A. and Snell, F. M. [1] Sustained Oscillations in a Catalytic Chemical System, Nature 191 (1961), 457-458.

[2] Transfer Function Analysis of an Oscillatory Model Chemical System, J. Theor. Biol. 16 (1967), 381-405.

Stakgold, I. [1] Branching of solutions of nonlinear equations, SIAM Review 13 (1971), 289-332.

Stern, T. E. [1] "Theory of Nonlinear Networks and Systems - An Introduction", Addison-Wesley, Reading, Mass. (1965).

Stoker, J. J. [1] "Nonlinear Vibrations", Interscience, New York (1950).

Takahashi, Y., Rabins, M. and Auslander, D. [1] "Control and Dynamic Systems", Addison Wesley, Reading, Mass. (1970).

Takens, F. [1] Unfolding of certain singularities of vector fields: generalized Hopf bifurcations, J. Diff. Eq. 14 (1973), 476-493.

[2] Singularities of vector fields, I.H.E.S. Publications Mathematiques 43 (1974), 47-100.

Temam, R. [1] On the Euler Equations of Incompressible Perfect Fluids, J. Funct. An., 20 (1975), 32-43.

Temam, R. et. al. [1] Proceedings of the Conference on Theoretical and Numerical Methods in Turbulence Theory (Orsay (1975)), Springer Lecture Notes (to appear).

Thom, R. [1] "Structural Stability and Morphogenesis", Addison Wesley, Reading, Mass. (1974).

Turing, A. M. [1] The chemical basis of morphogenesis, Phil. Trans. Roy. Soc. (B) (1925), 37-72.

Vainberg, M. M. and Trenogin, V. A. [1] "Theory of branching of solutions of non-linear equations", Noordhoff, Leyden (1974).

[2] The Methods of Lyapunov and Schmidt in the Theory of Nonlinear Equations and their Further Development, Russ. Math. Surveys 17 (1962), 1-60.

Varley, G., Gradwell, G. and Hassell, M. [1] "Insect Population Ecology", Univ. of California Press, Berkeley (1973).

Velte, W. [1] Uber ein Stabilitatskiterium der Hydrodynamik, Arch. Rat. Mech. An. 9 (1962), 9-20.

[2] Stabilitats verhalten und Verzweigung stationaret Losungen der Navier Stokesschen Gleichungen, Arch. Rat. Mech. An. 16 (1964), 97-125.

[3] Stabilitat und verzweigung stationaret Losungen der Navier-Stokesschen Gleichungen beim Taylorproblem, Arch. Rat. Mech. An. 22 (1966), 1-14.

Von Neumann, J. [1] Recent theories of turbulence, in "Collected Works", VI, Macmillan, New York (1963), 437-472.

Walter, C. [1] Oscillations in controlled biochemical systems, Biophys. J. 9 (1969), 863-872.

Weiss, L. [1] "Ordinary Differential Equations: Proceedings of NRL Symposium", Wiley (1973).

Weissler, F. [1] Thesis, Berkeley, Calif. (in preparation).

Williams, R. F. [1] One Dimensional Non-Wandering Sets, Topology 6 (1967), 473-487.

Whitham, C. [1] "Linear and Nonlinear Waves", Wiley (1972).

Wolibner, W. [1] Un théorème sur l'existence du mouvement plan d'un fluide parfait homogène, incompressible, pendant un temps infiniment longue, Math. Z. 37 (1933), 698-726.

Yorke, J. A. [1] Periods of periodic solutions and the Lipschitz constant, Proc. Am. Math. Soc. 22 (1969), 509-512.

Yosida, K. [1] "Functional Analysis", Springer-Verlag, Berline-Heidelberg-New York (1971).

Zeeman, E. C. [1] Topology of the Brain, in "Mathematics and Computer Science in Biology and Medicine", London: Medical Research Council (1965).

[2] Differential Equations for the Heartbeat and Nerve Impulse, p. 683 of Peixoto [1].

Zhabotinskii, A. M. and Zaikin, A. N. [1] Auto-wave processes in a distributed chemical system, J. Theor. Biol. 40 (1973), 45.

Ziegler, H. [1] "Principles of Structural Stability", Ginn-Blaisdell (1968).

A-admissible, 275

Almost Periodic Equations, 161-162

Aperiodic Motion, 333-335, 351

Attractor, 4-6
- Lyapunov, 4, 91, 93
- strange, 24, 297, 338-339
- vague, 66-67, 78-79, 205

Averaging, 155-159
- for almost periodic equations, 161-162
- and bifurcation to a torus, 161-162
- in diffusion equations, 160-161
- in Wright's equation, 159-160

Bénard Problem, 314, 316-317
- bifurcation in, 323-324
- stability in, 324-326

Bifurcation, 7-11
- in almost periodic equations, 161-162
- to aperiodic motion, 333-335
- and averaging, 155-159
- in the Bénard problem, 323-324
- in biological and chemical systems, 11, 160-161, 327-329
- in the Couette flow, 322
- Hopf, 8-11, 20-21, 23
- in the Navier-Stokes equation, 14-15
- in semigroups, 255-257
- stationary, 169
- and symmetry, 225
- to a torus, 9
- in Wright's equation, 159-160

Biological Systems, 11
- age structured, 339-340
- and bifurcation, 160-161, 327-329
- with discrete generations, 329-335
- and oscillations, 336-338, 341-347, 354-356, 360-361, 366-367
- and travelling waves, 349-350

Center Manifold Theorem, 19-20, 28, 30-43
- counterexample to analyticity, 44-46
- for diffeomorphisms, 207-208
- for flows, 46-48
- nonuniqueness of, 44-46
- for semigroups, 256
- with symmetry, 227

Center Theorem of Lyapunov, 98-99

Chemical Systems, 11, 160-161
- Zhabotinskii reaction, 149-150

Couette Flow, 16-17, 315
- bifurcation in, 322
- stability of, 324-326
- and symmetry, 240-249

Diffeomorphisms
- center manifold theorem for, 207-208

and Hopf bifurcation, 207-210

Energy Method, 270

Euler's Equations, 13, 287

Evolution System, 272-278
- infinitesimal generator of, 272
- and stability, 275
- Y-regular, 274

Flow, 258-260
- continuity and smoothness of, 260-267, 271, 278-284
- and energy method, 270
- time dependent, 271-276
- uniqueness of integral curves of, 267-269

Generator, Infinitesimal
- A-admissible, 275
- for evolution systems, 272
- and stability, 275-278

Generic, 299

Hodge Decomposition, 288

Hopf Bifurcation, 8-11, 165
- almost periodic, 161-162
- and averaging, 155-159
- in biological systems, 361, 160-161
- in chemical reactions, 149-150, 160-161
- for delay equations, 88
- for diffeomorphisms, 23, 207-210
- generalized, 85-90
- global, 90
- in Liénard's equation, 141-148
- in the Lorenz equations, 141-148
- multiparameter, 90
- in the Navier-Stokes equations, 306-312
- and Poincaré map, 66-67
- and van der Pol's equation, 139
- in R^2, 65-81
- in R^n, 81-82, 166-167, 201-204
- for semigroups, 255
- stability formula for, 126, 130, 132-135
- stability of, 77-80, 91-94
- uniqueness of, 80-81
- for vector fields, 20-21
- in Wright's equation, 159

Instability, 2, 5-6

Karmen Vortex Sheet, 15

Liénard's Equations, 136-137

Lorenz Equations, 141-148, 369
- and turbulence, 148

Lyapunov, 6, 66, 91, 93
- center theorem, 94-95

Lyapunov-Schmidt, 26

Navier-Stokes Equations, 12-18, 286
- and Bénard problem, 316-317
- and Couette flow, 16-17, 316
- global regularity of, 302-303

Hopf bifurcation in, 306-312
and Karmen vortex sheet, 15
local existence for, 290-295
and Poiseuille flow, 18
semiflow of, 289, 295-296
stability of, 298
and Taylor cells, 17
turbulence in, 15, 24

Oscillations in Biological Systems, 336-338, 341-347, 354-356, 360-361, 366-367

Poincaré Map, 21, 56-60
and Hopf bifurcation, 66-67
and stability, 61

Poiseuille Flow, 18

van der Pol's Equation, 139

Prandtl Number, 142

Rayleigh Number, 142

Reynold's Number, 12

Semiflow, 259
of Navier-Stokes Equations, 289, 295-296
and smoothness, 279-284

Semigroups
center manifold theorem for, 256
generator of, 274
and Hopf bifurcation, 255
invariant torus, 256-257
quasi contractive, 277
smooth, 253
and stability, 276-278

Spectral Radius, 50

Spectrum
and stability, 52-55

Stability, 3-6
asymptotic, 4
and averaging, 155-159
in the Bénard problem,
in the Couette flow, 324-326
for evolution systems, 275-278
formula for Hopf bifurcation, 126, 127, 132-135
for Hopf bifurcation, 77-80, 91-94, 166-167, 201-204
of invariant torus, 210
and linear equations, 6-7
in the Navier-Stokes equations, 298
omega (Ω), 369-372
and the Poincaré map, 61
for semigroups, 275-278
shift of, 9
and spectrum, 52-55

Strange Attractor, 24, 297, 338-339

Symmetry, 225
and center manifold, 227
and Couette flow, 240-249
and Taylor cells, 243-249

Taylor Cells, 17, 314, 315
  bifurcation to, 322
  stability of, 324-326
  and symmetry, 243-249

Torus, Invariant, 206-207
  and averaging, 162
  in semigroups, 256-257
  and turbulence, 297, 299

Turbulence, 15, 24
  and Couette flow, 297
  and invariant tori, 297, 299
  in Lorenz equations, 148
  and Navier-Stokes equations, 297, 299-303

Turing's Equations, 354-361

Vague Attractor, 65-66, 81-82, 205

Wright's Equations, 159-160

Y-regular, 274

Zhabotinskii Reaction, 149-150, 367

Applied Mathematical Sciences

Vol. 1 F. John
Partial Differential Equations
Second edition
ISBN 0-387-90111-6

Vol. 2 L. Sirovich
Techniques of Asymptotic Analysis
ISBN 0-387-90022-5

Vol. 3 J. Hale
Functional Differential Equations
ISBN 0-387-90023-3

Vol. 4 J. K. Percus
Combinational Methods
ISBN 0-387-90027-6

Vol. 5 R. von Mises and K. O. Friedrichs
Fluid Dynamics
ISBN 0-387-90028-4

Vol. 6 W. Freiberger and U. Grenander
A Short Course in Computational Probability and Statistics
ISBN 0-387-90029-2

Vol. 7 A. C. Pipkin
Lectures on Viscoelasticity Theory
ISBN 0-387-90030-6

Vol. 8 G. E. O. Giacaglia
Perturbation Methods in Non-Linear Systems
ISBN 0-387-90054-3

Vol. 9 K. O. Friedrichs
Spectral Theory of Operators in Hilbert Space
ISBN 0-387-90076-4

Vol. 10 A. H. Stroud
Numerical Quadrature and Solution of Ordinary Differential Equations
ISBN 0-387-90100-0

Vol. 11 W. A. Wolovich
Linear Multivariable Systems
ISBN 0-387-90101-9

Vol. 12 L. D. Berkovitz
Optimal Control Theory
ISBN 0-387-90106-X

Vol. 13 G. W. Bluman and J. D. Cole
Similarity Methods for Differential Equations
ISBN 0-387-90107-8

Vol. 14 T. Yoshizawa
Stability Theory and the Existence of Periodic Solutions and Almost Periodic Solutions
ISBN 0-387-90112-4

Vol. 15 M. Braun
Differential Equations and Their Applications
ISBN 0-387-90114-0

Vol. 16 S. Lefschetz
Applications of Algebraic Topology
ISBN 0-387-90137-X

Vol. 17 L. Collatz and W. Wetterling
Optimization Problems
ISBN 0-387-90143-4

Vol. 18 U. Grenander
Pattern Synthesis
Lectures in Pattern Theory Vol. 1
ISBN 0-387-90174-4