hep-th/0002073
CALT-68-2255
CITUSC/00-004
PRA-HEP 00/02

Casimir Effect Between World-Branes in Heterotic M-Theory

Michal Fabinger[1] and Petr Hořava[2]

[1] *Institute of Theoretical Physics, Charles University, 18000 Prague 8, Czech Republic*
fabinger@fzu.cz

[2] *CIT-USC Center for Theoretical Physics*
California Institute of Technology, Pasadena, CA 91125, USA
horava@theory.caltech.edu

We study a non-supersymmetric $E_8 \times \overline{E}_8$ compactification of M-theory on $\mathbf{S}^1/\mathbf{Z}_2$, related to the supersymmetric $E_8 \times E_8$ theory by a chirality flip at one of the boundaries. This system represents an M-theory analog of the D-brane anti-D-brane systems of string theory. Alternatively, this compactification can be viewed as a model of supersymmetry breaking in the "brane-world" approach to phenomenology. We calculate the Casimir energy of the system at large separations, and show that there is an attractive Casimir force between the E_8 and $\overline{E}_8$ boundary. We predict that a tachyonic instability develops at separations of order the Planck scale, and discuss the possibility that the M-theory fivebrane might appear as a topological defect supported by the $E_8 \times \overline{E}_8$ system. Finally, we analyze the eventual fate of the configuration, in the semiclassical approximation at large separations: the two ends of the world annihilate by nucleating wormholes between the two boundaries.

February 2000

1. Introduction

M-theory on an eleven-dimensional manifold $\mathcal{M}$ with non-empty boundary $\partial\mathcal{M}$ is described at long distances by bulk supergravity coupled to super Yang-Mills theory on $\partial\mathcal{M}$ [1,2]. The choice of the gauge group in the boundary sector is determined by an anomaly cancellation argument: each boundary component supports one copy of the E_8 supermultiplet. Thus, for example, the two boundary components of the supersymmetric $\mathbf{Z}_2$ orbifold $\mathbf{R}^{10} \times \mathbf{S}^1/\mathbf{Z}_2$ support one copy of E_8 each, and this orbifold describes the strongly coupled regime of the $E_8 \times E_8$ heterotic string on $\mathbf{R}^{10}$ [1].

Even though the anomaly cancellation mechanism of [1,2] uniquely determines the Yang-Mills gauge group at each boundary component to be E_8, in order to fully specify the boundary theory we still have a discrete choice to make. The ten-dimensional Yang-Mills supermultiplet contains a Majorana-Weyl gaugino χ, which satisfies one of two possible chirality conditions,

$$\chi = \pm\Gamma_{11}\chi. \tag{1.1}$$

Once a choice of the sign in (1.1) is made, the chirality of the boundary conditions on the bulk gravitino is also uniquely determined.

Since the anomaly cancellation argument works locally near each component of the boundary, the discrete choice of chirality in (1.1) can be made independently at each boundary component. On a manifold $\mathcal{M}$ with two boundary components, we thus have two distinct options: $(+,+)$ and $(+,-)$, depending on whether the two chiralities agree or disagree.

Consider again $\mathcal{M} = \mathbf{R}^{10} \times \mathbf{S}^1/\mathbf{Z}_2$ with a flat, direct-product metric. In the case of the $(+,+)$ boundary conditions, the two boundaries break the same half of the original supersymmetry, and we obtain the strongly coupled limit of $E_8 \times E_8$ heterotic string theory presented in [1]. In the $(+,-)$ case, each boundary component breaks a separate set of sixteen supercharges, leading to a configuration with gauge symmetry $E_8 \times E_8$ but no supersymmetry. We will refer to the $(+,-)$ case as the "$E_8 \times \overline{E}_8$ compactification," in order to indicate the opposite choice of chirality in the second E_8 factor, and to avoid any possible confusion with the supersymmetric $E_8 \times E_8$ compactification of [1]. It is this non-supersymmetric $E_8 \times \overline{E}_8$ theory that will be the subject of the present paper.

Since supersymmetry is completely broken in the $E_8 \times \overline{E}_8$ model, the distance L between the two boundaries is no longer an exact modulus, and the theory develops a non-trivial potential for L. (Furthermore, the flat metric on $\mathcal{M}$ will also be modified by

quantum corrections.) On these grounds, one can expect an attractive or repulsive force between the two boundaries that are initially at some separation L. We will analyze the force between the boundaries in the long-wavelength approximation, at separations much larger than the eleven-dimensional Planck length, $L \gg \ell_{11}$.

In the course of this paper, we will keep in mind two possible applications of the $E_8 \times \overline{E}_8$ system.

First of all, we observe that the $E_8 \times \overline{E}_8$ system can be thought of as an analog of the unstable Dp-D$\overline{p}$ brane systems recently much studied in string theory [3,4,5]. A system of Dp-D$\overline{p}$ brane pairs is unstable, and tends to annihilate to the vacuum. Indeed, the system develops an open-string tachyon at Dp-D$\overline{p}$ separations smaller than the string scale. This tachyon behaves as a Higgs field, and the Higgs mechanism corresponds to the world-volume description of the brane-antibrane annihilation. In the process of its annihilation, the unstable system can leave behind a bound state in the form of a lower-dimensional stable D-brane that appears as a defect on the worldvolume of the original unstable system. All stable D-branes can be described in this way as topological defects in a universal unstable system of spacetime-filling branes [4,5]. Underlying this construction is a deep relation between D-brane charges, RR fields, and K-theory [6,4,5,7]. As one of the points of this paper, we will try to convince the reader that the $E_8 \times \overline{E}_8$ system is indeed a rather close M-theoretic analog of such unstable Dp-D$\overline{p}$ systems of Type II and Type I string theory, and in fact exhibits some properties expected of the universal unstable system in M-theory.

Alternatively, one can compactify the $E_8 \times \overline{E}_8$ model on $\mathbf{R}^4 \times \mathbf{S}^1/\mathbf{Z}_2 \times Y$,[1] and think of one of the E_8 boundaries as a brane-world on the boundary of an effectively five-dimensional spacetime. In fact, it was this compactification of the supersymmetric $(+,+)$ model that was the direct predecessor [8,9,10] of the brane-world scenarios with large extra dimensions, and stimulated much of the recent flurry of interest in that area [11]. Similarly, the $E_8 \times \overline{E}_8$ model provides an intriguing example of supersymmetry breaking in the brane-world scenario, in a context fully embedded into M-theory. One could use the $E_8 \times \overline{E}_8$ model to address some of the important issues expected to arise in the brane-world physics, such as the dilaton runaway problem [12] (or its M-theoretic dual, "radius runaway" problem [9,10]), radius stabilization, and the scale of supersymmetry breaking.

[1] Here Y could be a Calabi-Yau manifold with a characteristic scale much smaller than the size of the $\mathbf{S}^1/\mathbf{Z}_2$.

In addition, our analysis of the $E_8 \times \overline{E}_8$ model will allow us to raise some important new issues – most notably, the issue of a catastrophic instability of some brane-world compactifications due to false vacuum decay.

2. Casimir Effect Between Two Ends of the World in M-Theory

2.1. The $E_8 \times \overline{E}_8$ model

Consider M-theory in $\mathbf{R}^{11}$ in a coordinate system x^M, $M = 0, \ldots, 10$, with a flat metric $g_{MN} = \eta_{MN} \equiv \mathrm{diag}\,(- + \cdots +)$, and with a boundary along $x^{10} = 0$. It is convenient to think of this model as a $\mathbf{Z}_2$ orbifold of M-theory in $\mathbf{R}^{11}$, where the orbifold group acts by $x^{10} \to -x^{10}$. In this picture, the boundary conditions on the gravitino are induced from the orbifold condition

$$\psi(-x^{10}) = \Gamma_{10}\psi(x^{10}). \tag{2.1}$$

(Here we are using a condensed notation, $\psi^\alpha = \psi^\alpha_\mu dx^\mu$ for the gravitino, with α being the 32-component Majorana spin index.) The boundary condition (2.1) breaks one half of the original supersymmetry, and defines what we mean by the "+ chirality." The boundary supports a Yang-Mills supermultiplet (A^a_A, χ^a), where x^A, $A = 0, \ldots 9$ are the coordinates along the boundary, a denotes the adjoint representation of E_8, and the gaugino χ^a satisfies $\chi^a = \Gamma_{11}\chi^a$, with the role of Γ_{11} played by Γ_{10}.

Imagine bringing in another boundary component adiabatically from infinity to a finite distance $x^{10} = L$, with the opposite choice of boundary conditions. (This corresponds to the $(+,-)$ model of the introduction.) It is again useful to think of this compactification as a $\mathbf{Z}_2$ orbifold of M-theory compactified to ten dimensions on $\widetilde{\mathcal{M}} = \mathbf{R}^{10} \times \mathbf{S}^1$ with radius

$$R_{10} = L/\pi, \tag{2.2}$$

and with the gravitino boundary condition at $x^{10} = L$ induced from the orbifold condition

$$\psi(L - x^{10}) = -\Gamma_{10}\psi(L + x^{10}). \tag{2.3}$$

Combining (2.1) and (2.3), the gravitino is found to be antiperiodic around the $\mathbf{S}^1$ factor of $\widetilde{\mathcal{M}}$,

$$\psi(x^{10} + 2\pi R_{10}) = -\psi(x^{10}), \tag{2.4}$$

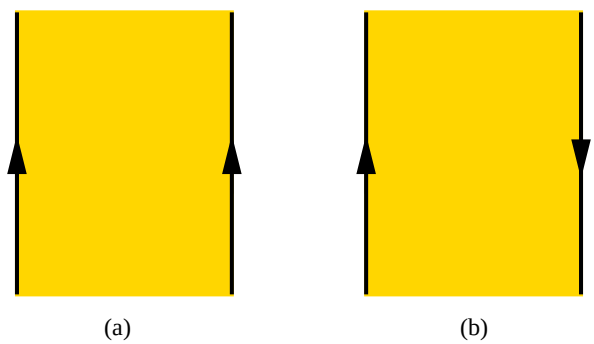

Fig. 1: Two compactifications of M-theory on $\mathbf{S}^1/\mathbf{Z}_2$: (a) The supersymmetric $E_8 \times E_8$ model, and (b) the nonsupersymmetric $E_8 \times \overline{E}_8$ model. The arrows along the spacetime boundaries schematically denote the chiralities of the boundary E_8 Yang-Mills supermultiplets.

and our model can be formally thought of as a $\mathbf{Z}_2$ orbifold of M-theory on $\widetilde{\mathcal{M}}$ with this non-supersymmetric choice of the spin structure.[2] (Compactifications of string theory on $\mathbf{S}^1$ with the non-supersymmetric spin structure were first studied by Rohm [13].)

Each boundary component separately supports a copy of the E_8 Yang-Mills supermultiplet, and breaks one half of the original supersymmetry. The low-energy Lagrangian of the system at large L is that of eleven-dimensional bulk supergravity coupled to one E_8 multiplet at each boundary component, and can in principle be constructed systematically as an expansion in the powers of the eleven-dimensional Planck length ℓ_{11} (or, more precisely, as a long-wavelength expansion in the powers of the dimensionless parameter ℓ_{11}/L), much like in [2].

2.2. Casimir force between the boundaries

Since the model breaks all supersymmetry, the size L of $\mathbf{S}^1/\mathbf{Z}_2$ is not a modulus, and quantum effects will generate a non-trivial potential for L. This potential leads to a force between the two boundaries, which can be either repulsive or attractive. In other words, the nonsupersymmetric $E_8 \times \overline{E}_8$ system will exhibit an M-theoretical analog of the Casimir effect [14]. In this section we will determine the leading behavior of the Casimir force at large separations L between the boundaries.

[2] In general, we do not understand M-theory well enough to be able to determine how its non-supersymmetric orbifolds should be constructed. However, in the case of our interest, each boundary component separately breaks only a half of the original supersymmetry. A mild assumption of cluster decomposition is sufficient to determine what happens at each boundary, as long as their separation is large.

If the force turns out to be repulsive, the eventual fate of the system will be uninteresting: the system will decompactify and sixteen supersymmetries will be restored as $L \to \infty$. In contrast, the case of an attractive force would be much more interesting. In that case, one could imagine setting up adiabatically an initial configuration with a very large separation between the two boundaries, and then letting the system evolve. The two boundaries will start attracting each other, and will presumably soon reach the regime of L of order the Planck length ℓ_{11} where our supergravity approximation is no longer valid. Still, the question of the final fate of the system makes perfect sense, and should have a well-defined answer in the full quantum M-theory despite our current inability to determine it due to our limited understanding of M-theory in the strongly coupled regime. Alternatively, one might hope that the potential has a minimum at some value of L that is large enough so that perturbation theory can still be used to analyze the resulting vacuum; this option would certainly be interesting phenomenologically.

We will now demonstrate that the Casimir force at large separation L is indeed attractive. Our calculation will proceed as follows. We start with the $E_8 \times \overline{E}_8$ model on $\mathcal{M} = \mathbf{R}^{10} \times \mathbf{S}^1/\mathbf{Z}_2$ with a flat, direct-product metric

$$ds_0^2 = \eta_{AB} dx^A dx^B + L^2 dz^2, \tag{2.5}$$

where x^A, $A = 0, \ldots 9$ are coordinates on $\mathbf{R}^{10}$, and we have introduced a rescaled coordinate z on the $\mathbf{S}^1/\mathbf{Z}_2$ factor such that $z \in [0, 1]$. We assume that the distance L between the boundaries is constant and large in Planck units. The geometry (2.5) represents a classical solution of the theory. Quantum fluctuations of the fields on $\mathcal{M}$ generate a non-zero expectation value $\langle T_{MN} \rangle$ of the energy-momentum tensor, which then modifies the classical flat static geometry of $\mathcal{M}$. At large separations L, this effect can be systematically studied in the long-wavelength expansion, i.e., in the perturbation theory in powers of ℓ_{11}/L. In this paper, we will only be interested in the leading-order perturbative correction to the flat geometry of $\mathcal{M}$. It is easy to show that the first non-zero contribution to $\langle T_{MN} \rangle$ will come from one loop in the supergravity sector, due to the mismatch in the boundary conditions for bosons and fermions in the supergravity multiplet.[3] Thus, our aim is to first calculate $\langle T_{MN} \rangle$ at one loop, and then determine the response of the metric on $\mathbf{R}^{10} \times \mathbf{S}^1/\mathbf{Z}_2$ to the leading non-trivial order in our long-wavelength expansion.

[3] The boundary Yang-Mills multiplets only contribute to $\langle T_{MN} \rangle$ at higher orders in the long-wavelength expansion, and will not enter our calculation.

Before actually calculating the first quantum correction $\langle T_{MN}\rangle$ to the vanishing energy momentum tensor of (2.5), notice first that its possible form is severely constrained. First of all, the Poincaré symmetry of the background metric (2.5) implies that $\langle T_{MN}\rangle$ takes the form

$$\langle T_{MN}\rangle dx^M dx^N = -E(z)\eta_{AB}dx^A dx^B + F(z)L^2 dz^2, \tag{2.6}$$

with $E(z)$ and $F(z)$ are in general some functions of z. Furthermore, the condition of energy-momentum conservation implies that F is a constant independent of z, but does not restrict the functional dependence of E on z. In order to determine $E(z)$, notice that in our system, the one-loop energy-momentum tensor in the flat background (2.5) has to be traceless. This implies that $F = 10E(z)$, and therefore $E(z) = E_0$ is a constant and the energy-momentum tensor (2.6) takes the following general form,

$$\langle T_{MN}\rangle dx^M dx^N = -E_0\,(\eta_{AB}dx^A dx^B - 10L^2 dz^2). \tag{2.7}$$

The remaining constant E_0 plays the role of the vacuum energy density in the eleven-dimensional theory, and can be efficiently determined by Kaluza-Klein reducing the theory from $\mathbf{R}^{10}\times\mathbf{S}^1/\mathbf{Z}_2$ to $\mathbf{R}^{10}$, and calculating the effective one-loop energy-momentum tensor $\langle T_{AB}\rangle_{10}$ of all the KK modes in $\mathbf{R}^{10}$. By Poincaré symmetry, we have

$$\langle T_{AB}\rangle_{10} = -\widetilde{E}_0\,\eta_{AB}, \tag{2.8}$$

where $\widetilde{E}_0$ is the the vacuum energy density in ten dimensions, or the one-loop effective cosmological constant. $\widetilde{E}_0$ is related to the vacuum energy density E_0 in eleven dimensions by

$$\widetilde{E}_0 = L\int dz\, E_0 = LE_0. \tag{2.9}$$

The one-loop energy density $\widetilde{E}_0$ is conveniently given by

$$\widetilde{E}_0 = -\int \frac{d^{10}p}{(2\pi)^{10}}\sum_{p_i}(-1)^{F_i}\int_0^\infty \frac{d\ell}{2\ell}e^{-(p^2+p_i^2)\ell/2}, \tag{2.10}$$

where the sum over p_i represents the sum over all Kaluza-Klein momenta as well as all possible polarizations in the supergravity multiplet, and F_i is the fermion number. No UV regularization at $\ell\to 0$ is needed as (2.10) will turn out to be finite. From the ten-dimensional perspective, the KK reduction gives 128 bosonic polarizations at each mass level $\pi m/L$ for m a positive integer, and 128 fermionic polarizations at each mass level $\pi r/L$

for r a positive odd-half-integer. (Recall the antiperiodicity conditions on the fermions, (2.4).) In addition, 64 out of the original 128 massless bosons also survive the orbifold projection from $\mathbf{S}^1$ to $\mathbf{S}^1/\mathbf{Z}_2$. Altogether, (2.10) becomes

$$\begin{aligned}\widetilde{E}_0 &= -64\int_0^\infty \frac{d\ell}{2\ell}\frac{1}{(2\pi\ell)^5}\left(\sum_{m\in\mathbf{Z}} e^{-m^2\pi^2\ell/2L^2} - \sum_{r\in\mathbf{Z}+\frac{1}{2}} e^{-r^2\pi^2\ell/2L^2}\right)\\ &= -64\int_0^\infty \frac{d\ell}{2\ell}\frac{1}{(2\pi\ell)^5}\sum_{s\in\mathbf{Z}}(-1)^s e^{-s^2\pi^2\ell/8L^2}\\ &= -64\int_0^\infty \frac{d\ell}{2\ell}\frac{1}{(2\pi\ell)^5}\theta_4(0|i\pi\ell/8L^2),\end{aligned} \tag{2.11}$$

where $\theta_4(u|t)$ is one of the Jacobi theta functions (our conventions for Jacobi theta functions are as in [15]). Rescaling the loop parameter $\ell \to \tau$ such that all the dependence on L is outside the integral, we thus obtain the following expression for the vacuum energy density per unit area of the boundary,

$$\widetilde{E}_0 = -\mathcal{J}\cdot\frac{1}{L^{10}}, \tag{2.12}$$

with the L-independent factor $\mathcal{J}$ given by the integral

$$\mathcal{J} = \frac{1}{2^{15}}\int_0^\infty \frac{d\tau}{\tau^6}\theta_4(0|i\tau). \tag{2.13}$$

It is easy to demonstrate that $\mathcal{J}$ is convergent and positive. First, change the variables to $t = 1/\tau$, and use the modular properties of the Jacobi theta functions, $\theta_4(0|T) = (-iT)^{-1/2}\theta_2(0|-1/T)$ to obtain

$$\mathcal{J} = \frac{1}{2^{15}}\int_0^\infty dt\, t^{9/2}\theta_2(0|it). \tag{2.14}$$

The theta function $\theta_2(0|it)$ is positive definite for real t, and decays exponentially as $t \to \infty$. Therefore, the integral over τ in (2.13) is convergent and positive. This shows that the vacuum energy density $\widetilde{E}_0$ per unit boundary area as given by (2.12) is negative.

Thus, we have demonstrated that the Casimir effect between the boundaries of the $E_8 \times \overline{E}_8$ model induces, in the leading order of the long-wavelength approximation, a negative cosmological constant. It is tempting to conclude that the negative ten-dimensional cosmological constant implies an attractive force between the two boundaries. Although this conclusion will turn out to be correct in our case (as we will see in detail in section 2.3), it cannot be reached with the mere knowledge of $\widetilde{E}_0$ and requires a more detailed information about the energy-momentum tensor in eleven dimensions. Indeed, it is not the sign of

the vacuum energy density, but rather the sign of T_{zz} that determines whether the force between the boundaries is attractive or repulsive. Using (2.7), (2.12), and (2.9), we obtain the one-loop energy-momentum tensor in eleven dimensions,[4]

$$\langle T_{MN}\rangle dx^M dx^N = \frac{\mathcal{J}}{L^{11}}(\eta_{AB}dx^A dx^B - 10L^2 dz^2). \tag{2.15}$$

The Casimir force $\mathcal{F}$ between the boundaries (per unit boundary area) is given by

$$\mathcal{F} = \langle T_{\hat{z}\hat{z}}\rangle = -\frac{10\mathcal{J}}{L^{11}} \quad < 0, \tag{2.16}$$

where $T_{\hat{z}\hat{z}}$ is the zz component of the energy-momentum tensor (2.15) in the orthonormal vielbein. It is reassuring that in our model the Casimir force $\mathcal{F}$ can also be obtained from the response of the energy density per unit boundary area to changing L,

$$\mathcal{F} = -\frac{\partial \widetilde{E}_0}{\partial L} = -\frac{10\mathcal{J}}{L^{11}}. \tag{2.17}$$

We conclude that the leading-order Casimir force exerted on the boundaries in the $E_8 \times \overline{E}_8$ model at large L is indeed attractive. Notice that this force exhibits the typical Casimir-like scaling (as L^{-D} in D spacetime dimensions) familiar from the conventional Casimir effect in electrodynamics [14].

2.3. Backreaction from the geometry

Imagine an initial configuration $\mathbf{R}^9 \times \mathbf{S}^1/\mathbf{Z}_2$ with the two boundaries at some large constant initial separation L_0, set up by starting in flat $\mathbf{R}^{10}$ and adiabatically bringing the boundaries in from infinity. The attractive Casimir force whose existence was demonstrated in section 2.2 suggests that as this initial configuration evolves with time, the boundaries should start moving closer together towards smaller values of L. This is similar to the case of a Dp-D$\overline{p}$ pair in string theory, but there are also some marked differences. Unlike the case of a Dp-brane, the effective theory on the E_8 boundary in M-theory does not contain a scalar that would describe the transverse movement of the boundary. Hence, if the two boundaries are to move closer together under the influence of the Casimir force, it has to

[4] This expression for the energy-momentum tensor can also be obtained by a direct one-loop calculation of the expectation value of the composite operator T_{MN} in eleven dimensions. This calculation reproduces our result (2.15), and we leave it as an exercise for the reader.

be due to a backreaction of the bulk metric to the non-zero Casimir energy-momentum tensor induced by the boundaries.

We will now analyze this response of the metric to the non-zero $\langle T_{MN}\rangle$ of (2.15), in the leading order in the long-wavelength expansion. Consider the following general form of the metric on $\mathbf{R}\times\mathbf{R}^9\times\mathbf{S}^1/\mathbf{Z}_2$,

$$ds^2 = -dt^2 + a^2(t)g_{ij}dx^i dx^j + L^2(t)dz^2, \tag{2.18}$$

where we have again used the rescaled coordinate z along $\mathbf{S}^1/\mathbf{Z}_2$, with $z\in[0,1]$. The indices $i,j=1,\ldots 9$ parametrize the spacelike slice (topologically $\mathbf{R}^9$) of the boundary geometry. The metric g_{ij} on $\mathbf{R}^9$ is constrained by the symmetries of the problem to be of constrant curvature, i.e., its Ricci tensor $\widetilde{R}_{ij}$ satisfies $\widetilde{R}_{ij}=kg_{ij}$. The initial configuration at $t=0$ corresponds to

$$ds^2_{\mathbf{R}^9\times\mathbf{S}^1/\mathbf{Z}_2} = g_{ij}dx^i dx^j + L_0^2 dz^2, \tag{2.19}$$

and we will study its response to the Casimir energy-momentum tensor at small $t>0$, in the leading order in the eleven-dimensional Newton constant $G_{11}\sim\ell_{11}^9$. In the metric (2.19) we had to allow for the possibility that the metric on $\mathbf{R}^9$ is not flat; in fact, as we will see below, its constant curvature k turns out to be non-zero at order G_{11}.

At zeroth-order, the metric is flat and the three-form gauge field C is zero, and we do not have to worry about corrections to Einstein's equations from higher-power curvature terms or the C-dependent terms in the Lagrangian. Thus, the equations of motion at first order in G_{11} are simply

$$R_{MN} = 8\pi G_{11}\langle T_{MN}\rangle. \tag{2.20}$$

Given our one-loop result for the energy-momentum tensor (2.15), we take $\langle\, T_{MN}\rangle$ in the form

$$\langle T_{MN}\rangle dx^M dx^N = \frac{\mathcal{J}}{L^{11}(t)}(-dt^2 + a^2(t)g_{ij}dx^i dx^j - 10L^2(t)dz^2), \tag{2.21}$$

where L is now allowed to depend on t. Notice that this adiabatic assumption is compatible with the requirement of energy-momentum conservation: the T_{MN} of (2.21) is conserved in the metric given by (2.18). The equations of motion (2.20) for (2.18) and (2.21) lead to

$$\begin{aligned} -\frac{9\ddot{a}}{a} - \frac{\ddot{L}}{L} &= -8\pi G_{11}\frac{\mathcal{J}}{L^{11}}, \\ 8(\dot{a})^2 + a\ddot{a} + \frac{a}{L}\dot{a}\dot{L} + k &= 8\pi G_{11}\frac{a^2\mathcal{J}}{L^{11}}, \\ L\ddot{L} + \frac{L}{a}\dot{a}\dot{L} &= -80\pi G_{11}\frac{\mathcal{J}}{L^9}. \end{aligned} \tag{2.22}$$

Since we are looking for the leading backreaction of the initial configuration (2.19) to the $\langle T_{MN}\rangle$ given by (2.21) at small $t>0$, we expand

$$\begin{aligned} L(t) =& L_0 + \frac{1}{2}L_2 t^2 + \ldots, \\ a(t) =& 1 + \frac{1}{2}a_2 t^2 + \ldots. \end{aligned} \tag{2.23}$$

Plugging this expansion into (2.22) determines

$$\begin{aligned} k &= -\frac{16\pi\mathcal{J}G_{11}}{9L_0^{11}}, \\ L_2 &= -\frac{80\pi\mathcal{J}G_{11}}{L_0^{10}}, \\ a_2 &= \frac{88\pi\mathcal{J}G_{11}}{9L_0^{11}}. \end{aligned} \tag{2.24}$$

Thus, we reach the following conclusions:

(1) At leading order in G_{11}, the spacetime geometry responds to the Casimir force by moving the boundaries closer together, i.e., $L(t) < L_0$ for (small) times $t > 0$. At the same time, the metric on the transverse $\mathbf{R}^9$ is rescaled by an increasing conformal factor $a(t) > 1$.

(2) Interestingly, the naive initial configuration with $k = 0$, corresponding to two flat boundaries at finite distance apart, is incompatible with the constraint part of Einstein's equations. As we adiabatically bring in the second boundary from infinity, the geometry of the transverse $\mathbf{R}^9$ responds by curving with a constant negative curvature given by k in (2.24).

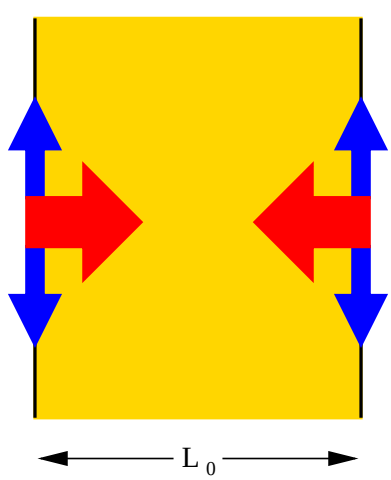

Fig. 2: The Casimir effect in the $E_8 \times \overline{E}_8$ model. According to (2.23) and (2.24), the initial geometry on $\mathbf{R}^9 \times \mathbf{S}^1/\mathbf{Z}_2$ with large initial separation L_0 evolves towards smaller L, while the boundary metric is getting rescaled.

2.4. Casimir effect on the open membrane

The supersymmetric $E_8 \times E_8$ compactification of M-theory on $\mathbf{R}^{10} \times \mathbf{S}^1/\mathbf{Z}_2$ describes the strongly coupled heterotic string theory in $\mathbf{R}^{10}$. The heterotic string itself corresponds to the open membrane stretching between the two E_8 boundaries. In this section we will study the open stretched membrane in the non-supersymmetric $E_8 \times \overline{E}_8$ model, and will find close parallels with the spacetime picture of the Casimir effect.

Consider an open membrane stretched between the two boundaries of spacetime, with worldvolume $\Sigma = \mathbf{R}^2 \times \mathbf{S}^1/\mathbf{Z}_2$ parametrized by (σ^m, ρ), $m = 0, 1$, and with $\rho \in [0, L]$. In addition to $x^M(\sigma^m, \rho)$, the bulk worldvolume theory contains the spacetime spinor $\theta^\alpha(\sigma^m, \rho)$. All boundary conditions are induced from the $\mathbf{Z}_2$ orbifold action on x^M, θ^α, and Σ. In particular, the fermions satisfy

$$\theta^\alpha(\sigma^m, -\rho) = \pm\Gamma_{10}\theta^\alpha(\sigma^m, \rho), \tag{2.25}$$

and similarly on the other boundary at $\rho = L$. This boundary condition (2.25) requires a sign choice, precisely correlated with the spacetime chirality choice (1.1). At each boundary, the bulk fields x^M and θ^α couple to a copy of the chiral E_8 current algebra at level one, whose chirality is uniquely determined by the choice of chirality in (2.25). Each boundary breaks one half of the original spacetime supersymmetry.

In the $(+,+)$ model, both boundaries break the same half of the original supersymmetry. The chiralities of the two E_8 current algebras agree, thus reproducing the characteristic chiral pattern of the heterotic string.

In our non-supersymmetric $E_8 \times \overline{E}_8$ model, corresponding to the $(+,-)$ chirality choice, the chiralities of the E_8 current algebras disagree, and each boundary breaks a separate half of the original supersymmetry. Due to this mismatch in the boundary conditions, we expect a worldvolume analog of the spacetime Casimir effect in the $E_8 \times \overline{E}_8$ model. Consider an open membrane with worldvolume $\mathbf{R}^2 \times \mathbf{S}^1/\mathbf{Z}_2$ stretching along $x^1, \ldots x^8 = 0$ between the two boundaries. We will calculate the leading correction τ to the membrane tension $\tau_0 \sim \ell_{11}^{-3}$. In fact, it will again be more convenient to calculate the correction $\widetilde{\tau} = L\tau$ to the vacuum energy density integrated over the compact dimension, i.e., the effective string tension. The first contribution to $\widetilde{\tau}$ comes again from the mismatch between the boundary conditions on bulk bosons and bulk fermions on the worldvolume, and does not involve the boundary E_8 current algebras. Repeating the steps we used in our analysis of the spacetime Casimir effect in section 2.2, and taking into account that we have eight

fermionic and eight bosonic degrees of freedom at each non-zero mass level, we obtain

$$\begin{aligned}\widetilde{\tau} &= -\int \frac{d^2p}{(2\pi)^2}\sum_{p_i}(-1)^{F_i}\int_0^\infty \frac{d\ell}{2\ell}e^{-(p^2+p_i^2)\ell/2} \\ &= -4\int_0^\infty \frac{d\ell}{2\ell}\frac{1}{2\pi\ell}\theta_4(0|i\pi\ell/8L^2) \\ &= -\frac{1}{L^2}\int_0^\infty \frac{dt}{8t^2}\theta_4(0|it).\end{aligned} \tag{2.26}$$

This again has the expected Casimir form, and arguments similar to those in section 2.2 prove that the Casimir correction $\widetilde{\tau}$ to the string tension, as given by (2.26), is finite and negative. This negative Casimir tension competes with the positive bare string tension $\widetilde{\tau}_0 \sim L\ell_{11}^{-3}$. While the supergravity approximation breaks down before we reach the regime of $L \sim \ell_{11}$, our results suggest that at distances L smaller than the eleven-dimensional Planck scale, the effective string that corresponds to the stretched open membrane becomes tachyonic.

3. Applications

Having demonstrated that the Casimir force between the boundaries of the $E_8 \times \overline{E}_8$ model at large separations is attractive, we feel compelled to present a few remarks on the possible eventual fate of the $E_8 \times \overline{E}_8$ configuration. In the process, we will keep in mind two different perspectives: the model can be viewed as an analog of the D-brane anti-D-brane systems of string theory, or alternatively, as a particular example of a brane-world compactification of M-theory with broken supersymmetry. In this section, we offer a closer inspection of these two applications, before addressing the eventual fate of the $E_8 \times \overline{E}_8$ system in section 4.

3.1. Analogy with the Dp-D$\overline{p}$ systems

The $E_8 \times \overline{E}_8$ system in M-theory is in many ways analogous to the Dp-D$\overline{p}$ brane systems recently studied in string theory. Consider a system consisting of a certain number N of coincident Dp-branes separated by some distance L from a system of N coincident D$\overline{p}$-branes, for simplicity in flat $\mathbf{R}^{10}$. This system differs from the BPS system of $2N$ Dp-branes by the orientation reversal on the antibranes. In this system, the branes and the antibranes each break a different half of the original supersymmetry, and the whole configuration is non-supersymmetric and unstable. There is an attractive force between

the branes and the antibranes [16], and at separations of order the string scale the $p\overline{p}$ open string connecting a Dp-brane to a D$\overline{p}$-brane becomes tachyonic.

All these facts have a close analogy in the $E_8 \times \overline{E}_8$ system. Indeed, the $E_8 \times \overline{E}_8$ system differs from the BPS $E_8 \times E_8$ system by the orientation reversal on the $\overline{E}_8$ boundary. As we have demonstrated in section 2, there is an attractive Casimir force between the two boundaries. The closest M-theory analog of the $p\overline{p}$ open string stretching between D-branes is the open membrane stretching between the two boundaries. The worldvolume Casimir effect found in section 2.4 suggests that the membrane becomes tachyonic at separations of order the Planck scale.

This analogy becomes even more evident when we compactify one of the non-compact dimensions of the $E_8 \times \overline{E}_8$ model on $\mathbf{S}^1$ with the supersymmetric spin structure, radius R', and a Wilson line that breaks each E_8 to $SO(16)$, and then go to the limit of small R' while keeping the distance L between the boundaries large. By cluster decomposition, this is equivalent to a $\mathbf{Z}_2$ orientifold of the weakly coupled Type IIA theory. This orientifold is a non-supersymmetric variant of the Type I$'$ orientifold, with sixteen D8-branes on top of an orientifold plane at one end, and sixteen D$\overline{8}$-branes on top of an orientifold plane with the opposite orientation (i.e., an "antiorientifold" plane) at the other end. Clearly, the open stretched membrane connecting the E_8 and $\overline{E}_8$ boundaries descends to the open string stretched between the D8 and D$\overline{8}$.

In string theory, the Dp-D$\overline{p}$ system is unstable, and is expected to decay to the supersymmetric vacuum [3]. In the process, the open-string tachyon behaves as a Higgs field and condenses to a minimum of its potential, breaking the worldvolume gauge symmetry to its diagonal subgroup [4],

$$U(N) \times U(N) \to U(N). \tag{3.1}$$

Since the outcome of this annihilation should be equivalent to the supersymmetric vacuum, the residual gauge symmetry in (3.1) should also disappear, presumably by the process suggested and analyzed in [17]. This annihilation of the Dp-D$\overline{p}$ system can be obstructed by the topological difference between the Chan-Paton bundles E and F carried by the Dp-branes and D$\overline{p}$ branes. The obstruction $E - F$ is naturally an element of the (reduced) K-theory group of spacetime, and can be interpreted as a lower-dimensional D-brane charge. In this way, the spectrum of stable D-branes in codimension k follows from the famous Bott periodicity pattern, $\widetilde{K}(\mathbf{S}^k) = \mathbf{Z}$ for k even, and zero for k odd. Alternatively, one can view the obstruction against annihilation as a topological defect in the tachyon field,

classified by the homotopy groups of the vacuum manifold $U(N)$ of the worldvolume Higgs mechanism,

$$\begin{aligned} \pi_{2n-1}(U(N)) &= \mathbf{Z}, \\ \pi_{2n}(U(N)) &= 0, \end{aligned} \tag{3.2}$$

with N in the stable regime. Using this representation, one can construct any stable D-brane (at least in the absence of the 3-form field strength, $H = 0$) as a defect in the universal, spacetime-filling medium of sixteen D9-D$\overline{9}$ pairs in Type IIB theory [4], or 32 unstable D9-branes in Type IIA theory [5].[5]

Once this picture is established in string theory, it is natural to ask whether it can be lifted to M-theory. However, the spectrum of stable branes that one could use to build unstable brane systems in M-theory is very limited. One could contemplate using M5-M$\overline{5}$ pairs [18], but such systems exhibit very complicated worldvolume dynamics, with Yang-Mills gauge bundles replaced by objects carrying two-form gauge fields. In contrast, as we have just seen the $E_8 \times \overline{E}_8$ system is a much closer M-theory analog of the Dp-D$\overline{p}$ systems, in part also because the boundaries carry conventional Yang-Mills gauge bundles. In fact, it turns out that the $E_8 \times \overline{E}_8$ system exhibits certain properties expected of the universal system in M-theory.

Since the two E_8 boundaries of the $E_8 \times \overline{E}_8$ model attract each other one can imagine that in analogy with the Dp-D$\overline{p}$ systems they could annihilate, possibly forming bound states whose conserved quantum numbers would be classified by the topological difference $E - F$ between the two E_8 bundles at the two boundaries. Remarkably, E_8 bundles on a ten-manifold M are classified by only one topological invariant $\lambda(E) \in H^4(M, \mathbf{Z})$, which assigns an E_8 instanton number to each 4-cycle in M. Thus, the only topological difference between the two E_8 bundles E and F would be the difference between their "instanton numbers," $\lambda(E) - \lambda(F)$. Another way of seeing this follows from the structure of homotopy groups of the E_8 group manifold, which in the range of values of k relevant for M-theory are given by [19]

$$\begin{aligned} \pi_3(E_8) &= \mathbf{Z}, \\ \pi_k(E_8) &= 0, \quad k \neq 3. \end{aligned} \tag{3.3}$$

Even though we cannot follow the dynamics of the $E_8 \times \overline{E}_8$ system to the regime of small separations $L \sim \ell_{11}$, the structure of the homotopy groups (3.3) and the analogy with

[5] For more details on the relation between D-brane charges, the worldvolume Higgs mechanism, and K-theory, see [4,5].

the Dp-D$\overline{p}$ systems suggest that at separations smaller than the Planck length the gauge symmetry should be broken to its diagonal subgroup,

$$E_8 \times E_8 \to E_8, \tag{3.4}$$

Codimension k defects in this Higgs pattern are topologically classified by the elements of the $(k-1)$-th homotopy group of the vacuum manifold E_8. It is intriguing that (3.3) leaves precisely enough room for the M5-brane to appear as a bound state of two E_8 ends of the world! Indeed, the quantum number in $\pi_3(E_8)$ can be interpreted as the M5-brane charge, since it corresponds to the difference between the E_8 instanton numbers at the two boundaries (on the four-cycle transverse to the defect). This is in accord with the fact that a small E_8 instanton can leave the boundary in M-theory as a bulk M5-brane.

We conclude our discussion of the analogy with Dp-D$\overline{p}$ systems with a few remarks:

(1) Since the $E_8 \times \overline{E}_8$ system of M-theory is so closely related to Dp-D$\overline{p}$ systems of string theory, it is natural to expect that as the two E_8 boundaries come close together under the influence of the Casimir force, some form of brane-antibrane annihilation will take place. We will present further evidence supporting this conjecture in section 4.

(2) Further compactification on $\mathbf{S}^1$ with the supersymmetric spin structure allows one to interpret the $E_8 \times \overline{E}_8$ system as a natural lift to M-theory of the system of sixteen D8-D$\overline{8}$ pairs. Note that this is precisely the most natural value suggested by K-theory for the universal system of unstable branes in Type IIA string theory [4,5], and the $E_8 \times \overline{E}_8$ system is large enough to be universal in M-theory.

(3) If the gauge symmetry is broken at small L according to (3.4), a residual E_8 gauge symmetry survives. In the low-energy field theory approximation of the Dp-D$\overline{p}$ system, the Higgs pattern (3.1) leaves a residual non-supersymmetric $U(N)$ Yang-Mills theory on top of the supersymmetic vacuum, whose fate in the full theory is discussed in [17]. Is there a candidate for describing the residual E_8 gauge symmetry in M-theory? Since the size of the eleventh dimension is small in the Higgs regime, such a description – if it exists – should be in terms of a weakly coupled, non-supersymmetric, non-chiral, and modular invariant heterotic string theory in $\mathbf{R}^{10}$ with gauge group E_8. It is intriguing that a heterotic string theory with such properties does in fact exist [20,21]. Its perturbative spectrum contains no tachyons in non-trivial E_8 representations, but there is a neutral tachyon suggesting a residual instability of this theory, which could be related to the inherent instability of the $E_8 \times \overline{E}_8$ system discussed in section 4.

3.2. Brane-world scenarios

Compactify the $E_8 \times \overline{E}_8$ model down to $\mathbf{R}^4 \times \mathbf{S}^1/\mathbf{Z}_2$ on some six-manifold Y. One of the boundaries can then be viewed as a "brane-world," and the whole system as a model for supersymmetry breaking in the brane-world scenario. Similar compactifications of the supersymmetric $E_8 \times E_8$ theory on Y which is (to zeroth-order) a Calabi-Yau manifold preserve $\mathcal{N} = 1$ supersymmetry in the four non-compact dimensions [8]. One can similarly compactify the $E_8 \times \overline{E}_8$ model on such Y so that each boundary preserves $\mathcal{N} = 1$ supersymmetry. However, due to the mismatch between the two boundaries, all supersymmetries are broken in the full system. This pattern of supersymmetry breaking is very similar to the supersymmetry breaking in the supersymmetric $E_8 \times E_8$ theory by gluino condensation in the hidden E_8 [10]: in that case, the gluino condensate at the hidden boundary still preserves $\mathcal{N} = 1$ supersymmetry, which is however mismatched with the $\mathcal{N} = 1$ supersymmetry preserved at the other boundary.

Previous studies of supersymmetry breaking patterns in heterotic M-theory (such as the hidden sector supersymmetry breaking of [10]) lead us to expect the M-theoretic dual of the dilaton runaway problem [12,9] – for large initial distances L between the boundaries, the potential for L tends to run L to infinity, and therefore zero effective coupling $1/L$. In contrast, the Casimir effect in the $E_8 \times \overline{E}_8$ model drives L to smaller values, and can therefore play an important role in the radius stabilization problem. This issue clearly deserves a closer study of the Casimir effect in compactifications of the $E_8 \times \overline{E}_8$ model on Y, which is beyond the scope of the present paper.

4. Fate of the $E_8 \times \overline{E}_8$ System: End-of-the-World Annihilation in M-Theory

As we have seen, the $E_8 \times \overline{E}_8$ system is a close analog of the unstable Dp-D$\overline{p}$ systems of string theory, and one may expect that the eventual fate of the system will involve some form of brane-antibrane annihilation. Upon further compactification on an extra $\mathbf{S}^1$ with the supersymmetric spin structure, the two E_8 boundaries indeed descend to a system of sixteen D8-branes and sixteen D$\overline{8}$-branes on top of two orientifold 8-planes, and we certainly expect the D8-D$\overline{8}$ system to annihilate. When lifted to M-theory, this expectation immediately leads to a puzzle: assuming that the E_8 degrees of freedom at the two boundaries annihilate, what is left after this annihilation? Are we left with some M-theory analogs of orientifold planes with no Yang-Mills degrees of freedom? Such orientifold planes would carry a gravitational anomaly [1]. Or do the orientifold planes also annihilate

each other in the process, restoring M-theory on $\mathbf{S}^1$ with some (small) radius and 32 supersymmetries?

These questions are of course difficult to address directly because the answers lie in the strongly coupled regime where we have no control over the theory.[6] It turns out, however, that we can study the fate of the system already at large L, where the annihilation of the two boundaries is a non-perturbative effect suppressed exponentially in (a power of) $1/L$. As we are now going to show, this argument reveals that neither of the two scenarios outlined above are realized. It turns out that the $E_8 \times \overline{E}_8$ system is unstable to false vacuum decay [22], which is of the catastrophic type [23] with the spacetime manifold annihilating to nothing!

4.1. The wormhole instanton

Consider the $E_8 \times \overline{E}_8$ model on $\mathbf{R}^{10} \times \mathbf{S}^1/\mathbf{Z}_2$ with the flat, direct product metric

$$ds_0^2 = \eta_{MN} dx^M dx^N, \qquad x^{10} \in [0, L]. \tag{4.1}$$

This configuration represents a classical solution, whose first quantum corrections in the long-wavelength, large-L expansion due to the Casimir effect were calculated in section 2.3. There is a Euclidean instanton in this theory, asymptotic to (4.1) as $r \equiv \sqrt{\eta_{AB} x^A x^B} \to \infty$. This instanton is given by a $\mathbf{Z}_2$ orbifold of the Euclidean Schwarzschild solution in eleven dimensions,[7]

$$ds^2 = \left(1 - \left(\frac{4L}{\pi r}\right)^8\right)(dx^{10})^2 + \frac{dr^2}{1 - \left(\frac{4L}{\pi r}\right)^8} + r^2 d^2\Omega_9, \tag{4.2}$$

under the orbifold action $x^{10} \to -x^{10}$. The Euclidean Schwarzschild solution indeed has the correct spin structure asymptotically at large r (recall (2.4)), and also survives the $\mathbf{Z}_2$ projection; hence, it represents a legitimate classical solution of the $E_8 \times \overline{E}_8$ compactification of M-theory asymptotic to (4.1), in the supergravity approximation.[8] While the

[6] It does not seem possible to use a matrix model definition of the $E_8 \times \overline{E}_8$ system, due to the difficulty one would have with defining a light-cone frame in the metric that is curved by the Casimir effect, and due to the absence of supersymmetry needed to protect flat directions and hence a macroscopic spacetime in matrix theory.

[7] All of our gravity sign conventions are as in Misner, Thorne and Wheeler, [24].

[8] In string theory, similar orbifolds of Euclidean Schwarzschild black holes (in 1+1 dimensions) were considered in [25]. In that case, $\mathbf{Z}_2$ is an orientifold symmetry, which reverses worldsheet

Euclidean Schwarzschild solution is topologically $\mathbf{R}^2 \times \mathbf{S}^9$, its $\mathbf{Z}_2$ orbifold is topologically $\mathbf{R}^2_+ \times \mathbf{S}^9$, where $\mathbf{R}^2_+$ denotes the half-plane. Thus, this solution has only one boundary component, topologically $\mathbf{R} \times \mathbf{S}^9$.

The Euclidean Schwarzschild instanton has a negative mode, which also survives our orbifold projection. Since (4.2) is smooth and falls off fast enough at inifinity to have zero ADM mass, the positive energy theorem is manifestly invalid classically in the $E_8 \times \overline{E}_8$ system. The instanton (4.2) represents a bounce, responsible for false vacuum decay in the theory. (For some background on false vacuum decay in field theory, gravity, and string theory, see [26,23,27] and [22].)

The outcome of the false vacuum decay mediated by the bounce instanton (4.2) can be read off from the turning point of the instanton and its subsequent evolution in the Minkowski signature. The turning point of (4.2) can be identified as follows. Write the metric on the $\mathbf{S}^9$ as $d^2\Omega_9 = d\theta^2 + \sin^2\theta\, d^2\Omega_8$, where $d^2\Omega_8$ is the round metric on $\mathbf{S}^8$, and $\theta \in [0, \pi]$. The turning point corresponds to $\theta = \pi/2$, a slice of space with zero extrinsic curvature, topologically $\mathbf{R}_+ \times \mathbf{S}^8$. Thus, the geometry nucleated by the instanton (4.2) has the form of a wormhole connecting the two boundaries, as depicted in Fig. 3. The evolution of this initial condition is obtained by Wick-rotating the Euclidean time $\theta \to \pi/2 + it$. At $t > 0$, the Minkowski-signature metric is

$$ds^2 = -r^2 dt^2 + \left(1 - \left(\frac{4L}{\pi r}\right)^8\right)(dx^{10})^2 + \frac{dr^2}{1 - \left(\frac{4L}{\pi r}\right)^8} + r^2 \cosh^2 t\, d^2\Omega_8. \tag{4.3}$$

It is convenient to introduce new coordinates (W, T), given by

$$\begin{aligned} W &= r \cosh t, \\ T &= r \sinh t. \end{aligned} \tag{4.4}$$

In these coordinates, the metric on the boundary $x^{10} = 0$ of (4.3) becomes

$$ds^2 = -dT^2 + dW^2 + \left(\pi^8 \left(\frac{W^2 - T^2}{16L^2}\right)^4 - 1\right)^{-1} \frac{(W dW - T dT)^2}{W^2 - T^2} + W^2 d^2\Omega_8. \tag{4.5}$$

Our coordinate system is singular at $W^2 = 16L^2/\pi^2 + T^2$ and describes only one half of the full, smooth geometry of the expanding wormhole. The other half of the wormhole

orientation. Similarly in the present case, if we compactify (4.2) on an extra $\mathbf{S}^1$ with the supersymmetric spin structure, it corresponds to an orientifold of the Schwarzschild solution of Type IIA theory.

is a mirror copy of (4.5), and connects smoothly to (4.5) at the eight-sphere $\mathbf{S}^8_{min}$ of minimal area located at $W^2 = 16L^2/\pi^2 + T^2$ inside the wormhole. The radius $\mathcal{R}_{min}$ of the minimal-area sphere $\mathbf{S}^8_{min}$ increases with growing T, with a speed approaching the speed of light:

$$\mathcal{R}_{min}(T) = \sqrt{16L^2/\pi^2 + T^2}. \tag{4.6}$$

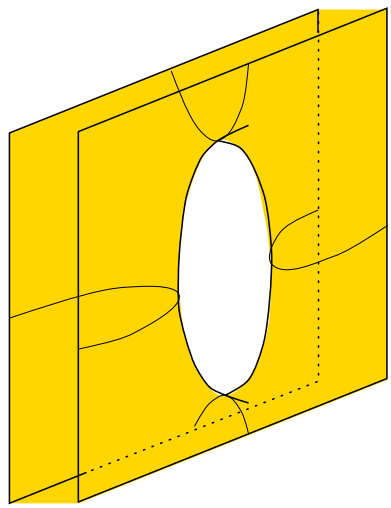

Fig. 3: The wormhole geometry nucleated at $t = 0$ by the "bounce" (4.2). After its nucleation, the size of the wormhole expands with a speed quickly approaching the speed of light.

The existence of the wormhole bounce solution (4.2) in the $E_8 \times \overline{E}_8$ model indicates the existence of a decay channel in which the vacuum decays to nothing by nucleating wormholes. The probability for nucleating a single wormhole per unit boundary area and unit time is exponentially small in $1/L$, and of order

$$\exp\left\{-\frac{4(2L)^8}{3\pi^4 G_{10}}\right\} \tag{4.7}$$

where G_{10} is the ten-dimensional effective Newton constant. The exponent in (4.7) is one half of the action of the Euclidean Schwarzschild black hole in eleven dimensions, since our bounce corresponds to one half of the full black hole geometry.

Thus, we have discovered a non-perturbative mechanism which indeed corresponds to the expected annihilation between the E_8 and $\overline{E}_8$ boundaries. This also resolves the small puzzle raised at the beginning of this section: in this annihilation process, not only the E_8 "branes" annihilate – the whole spacetime does!

This spacetime annihilation is a non-perturbative effect in $1/L$. So far in this section, we have neglected perturbative corrections in powers of $1/L$. Indeed, the perturbative Casimir effect will dominate at large L over the exponentially suppressed decay of the (approximate) vacuum. If the full potential has a minimum at some large value of L, the bounce solution will be slightly modified, but we expect our conclusions about the catastrophic instability of this vacuum to hold. If the dynamics of the system drives L to values of order the Planck scale, our approximation becomes invalid. However, if the system settles in a minimum of the potential outside the reach of large-L perturbation theory without encountering a phase transition, this minimum will still be separated from the catastrophic decay to nothing by only a finite-size potential barrier.

4.2. Boundary geometry of the expanding wormhole

Once a wormhole is nucleated, it will expand with a speed approaching the speed of light, at least until multi-wormhole effects become relevant. We will now look more closely at the geometry induced on the boundary of a single expanding wormhole (4.3).

The bulk geometry (4.3) describes a non-static metric which satisfies the vacuum Einstein equations $R_{MN} = 0$. On the other hand, the metric induced on the boundary is not Ricci flat; a straightforward calculation reveals

$$\widetilde{R}_{AB} = 4\left(\frac{4L}{\pi}\right)^8 \frac{1}{r^{10}}\left(g_{AB} - 10\,\hat{e}^r_A \hat{e}^r_B\right), \tag{4.8}$$

where $\hat{e}^r$ is the unit one-form along dr,

$$\hat{e}^r_A = \frac{\delta^r_A}{\sqrt{1-\left(\frac{4L}{\pi r}\right)^8}}, \tag{4.9}$$

and $\widetilde{R}_{AB}$ is the Ricci tensor of the boundary metric (not to be confused with the AB components of the bulk Ricci tensor R_{MN}.) Notice that the coefficient in front of the $\hat{e}^r\hat{e}^r$ term in (4.8) is precisely such that the boundary Ricci scalar vanishes,

$$\widetilde{R} \equiv g^{AB}\widetilde{R}_{AB} = 0. \tag{4.10}$$

Thus, the boundary observer perceives an expanding universe, and feels the presence of an effective matter distribution whose energy-momentum tensor is traceless,

$$T_{AB} = \frac{1}{8\pi\widetilde{G}_{10}}\widetilde{R}_{AB} = \frac{1}{2\pi\widetilde{G}_{10}}\left(\frac{4L}{\pi}\right)^8 \frac{1}{r^{10}}\left(g_{AB} - 10\,\hat{e}^r_A \hat{e}^r_B\right), \tag{4.11}$$

with $\widetilde{G}_{10}$ the effective Newton constant at the boundary. Notice the characteristic non-perturbative behavior $T_{AB} \sim L^8/\widetilde{G}_{10}$.

The boundary Ricci scalar $\widetilde{R}$ vanishes, but there will be other curvature invariants that are non-zero. For example, one finds

$$\widetilde{R}_{AB}\widetilde{R}^{AB} = 1440 \left(\frac{4L}{\pi}\right)^{16} \frac{1}{r^{20}}. \tag{4.12}$$

This curvature invariant reaches its largest value on the smallest sphere inside the wormhole at the nucleation time $T = 0$, where it is equal to $\frac{45\pi^4}{8L^4}$. This is indeed small for large L and our supergravity approximation is valid everywhere as long as the asymptotic separation of the two boundaries is large.

One can introduce a coordinate y that is better suited to study the geometry of the expanding wormhole near its center $\mathbf{S}^8_{min}$,

$$y = \sqrt{1 - \left(\frac{4L}{\pi r}\right)^8}. \tag{4.13}$$

This coordinate covers the inside of the wormhole, with the sphere $\mathbf{S}^8_{min}$ of minimal area at $y = 0$. One can now express the boundary metric near $y \approx 0$ as follows,

$$\begin{aligned} ds^2 \approx \left(\frac{4L}{\pi}\right)^2 \Bigg\{ &\left(1 - \frac{1}{4}y^2 + \dots\right)(-dt^2 + \cosh^2 t\, d^2\Omega_8) \\ &+ \frac{1}{16}\left(1 - \frac{9}{4}y^2 + \dots\right) dy^2 \Bigg\}. \end{aligned} \tag{4.14}$$

Thus, at large proper times since the nucleation of the wormhole, the observer located inside the wormhole at $y = 0$ will experience exponential inflation of the wormhole throat $\mathbf{S}^8$.

It is also instructive to calculate $\delta(x^{10}) \wedge \mathrm{tr}\,(R \wedge R)$, since this expression appears in the Bianchi identity [2] for the four-form field strength G and, if non-zero, serves as a source for G. However, it is straightforward to see that the four-form $\omega \equiv \mathrm{tr}\,(R \wedge R)$ at the boundary is zero. Indeed, ω can be written as a sum $\omega = \sum_{p=1}^4 \omega_p$, where ω_p is a four-form with p of its legs on $\mathbf{S}^8$ (and possibly dependent on the coordinates transverse to the $\mathbf{S}^8$); but no such invariant p-forms exist on $\mathbf{S}^8$ with the round metric, and $\delta(x^{10}) \wedge \mathrm{tr}\,(R \wedge R)$ vanishes for the boundary geometry given by (4.5).

5. Conclusions

In this paper we have demonstrated the existence of an attractive Casimir force between two E_8 boundaries with mismatched chiralities in M-theory. In fact, we have argued that – in analogy with the Dp-D$\overline{p}$ brane systems of string theory – the two boundaries of the $E_8 \times \overline{E}_8$ system annihilate, in a process which annihilates the entire spacetime manifold to nothing.

From the point of view of the bulk observer, this is just another example of the catastrophic false vacuum decay [23,22] whereby a hole in the spacetime manifold is first nucleated and then expands with a speed approaching the speed of light. As a consequence, we would not want to live in the bulk.

For a boundary observer, however, the decay of the $E_8 \times \overline{E}_8$ system looks a little less catastrophic: a wormhole connecting the two boundaries is nucleated, and the radius of its throat expands exponentially. Thus, living inside the boundary is perhaps not as bad as living in the bulk. The boundary observer indeed experiences the decay of the bulk as a time-dependent cosmological evolution of the boundary, and observes topology-changing processes that connect the observed brane-world to its hidden counterpart. This is an example of what one should expect in general "many-fold" universe scenarios such as those of [28], where the neighboring folds of the brane-world are each other's antibranes.

This instability to false vacuum decay is rather generic in non-supersymmetric compactifications of string theory and M-theory [22], and could impose a strong constraint on phenomenologically acceptable scenarios. In the case of brane-worlds, one could prevent catastrophic vacuum decay by considering non-supersymmetric branes that carry a K-theory charge. It is perhaps not necessary to look for a compactification where the catastrophic decay is absent, however. Indeed, in the $E_8 \times \overline{E}_8$ model at large boundary separations L, the wormhole nucleation – and therefore the probability for spacetime to decay into nothing – is exponentially suppressed with $1/L$ (see (4.7)), and for large enough L, the lifetime of the universe can still be cosmologically large. This creates an intriguing possibility whereby the cosmological evolution of the observed universe would correspond to the evolution on the boundary of a bulk spacetime undergoing a catastrophic vacuum decay!

In analogy with the Dp-D$\overline{p}$ systems of string theory, we expect the two E_8 boundaries of the $E_8 \times \overline{E}_8$ system to completely annihilate only if there is no topological obstruction carried by the two E_8 bundles. In section 3 we presented topological arguments suggesting

that the system can support 5-brane bound states. It is tempting to speculate that the bulk spacetime of the $E_8 \times \overline{E}_8$ system with a non-zero net 5-brane charge would still annihilate, possibly leaving behind the 5-brane charges in the form of a little string theory.

During the course of this work, M.F. benefitted from helpful discussions with J. Formánek, L. Motl, and J. Niederle. P.H. wishes to acknowledge useful conversations with O. Bergman, E. Gimon, C. Johnson, and E. Witten. The work of M.F. has been supported in part by an undergraduate fellowship at the Faculty of Mathematics and Physics, Charles University, and by the Institute of Physics, Academy of Sciences of the Czech Republic under Grant No. GA-AVČR A1010711. The work of P.H. has been supported by a Sherman Fairchild Prize Fellowship, and by DOE grant DE-FG03-92-ER 40701.

References

[1] P. Hořava and E. Witten, "Heterotic and Type I String Dynamics from Eleven Dimensions," *Nucl. Phys.* **B460** (1996) 506, hep-th/9510209.

[2] P. Hořava and E. Witten, "Eleven-Dimensional Supergravity on a Manifold with Boundary," *Nucl. Phys.* **B475** (1996) 94, hep-th/9603142.

[3] A. Sen, "Non-BPS States and Branes in String Theory," hep-th/9904207, and references therein.

[4] E. Witten, "D-Branes and K-Theory," *JHEP* **9812** (1998) 019, hep-th/9810188.

[5] P. Hořava, "Type IIA D-Branes, K-Theory, and Matrix Theory," *Adv. Theor. Math. Phys.* **2** (1998) 1373., hep-th/9812135.

[6] R. Minasian and G. Moore, "K-Theory and Ramond-Ramond Charge," *JHEP* **9711** (1997) 002, hep-th/9710230.

[7] E. Witten and G. Moore, "Self-Duality, Ramond-Ramond Fields, and K-Theory," hep-th/9912279.

[8] E. Witten, "Strong Coupling Expansion of Calabi-Yau Compactification," *Nucl. Phys.* **B471** (1996) 135, hep-th/9602070.

[9] T. Banks and M. Dine, "Couplings and Scales in Strongly Coupled Heterotic String Theory," *Nucl. Phys.* **B479** (1996) 173, hep-th/9605136.

[10] P. Hořava, "Gluino Condensation in Strongly Coupled Heterotic String Theory," *Phys. Rev.* **D54** (1996) 7561, hep-th/9608019.

[11] A. Lukas, B.A. Ovrut, K.S. Stelle and D. Waldram, "The Universe as a Domain Wall," *Phys. Rev.* **D59** (1999) 086001, hep-th/9803235; N. Arkani-Hamed, S. Dimopoulos and G. Dvali, "The Hierarchy Problem and New Dimensions at a Millimeter," *Phys. Lett.* **B429** (1998) 263, hep-ph/9803315; I. Antoniadis, N. Arkani-Hamed, S. Dimopoulos and G. Dvali, "New Dimensions at a Millimeter and Superstrings at a TeV," *Phys. Lett.* **B436** (1998) 257, hep-ph/9804398; Z. Kakushadze and S.-H.H. Tye, "Brane World," *Nucl. Phys.* **B548** (1999) 180, hep-th/9809147; L. Randall and R. Sundrum, "A Large Mass Hierarchy from a Small Extra Dimension," *Phys. Rev. Lett.* **83** (1999) 3370, hep-ph/9905221, to name a few.

[12] M. Dine and N. Seiberg, "Is the Superstring Weakly Coupled?," *Phys. Lett.* **B162** (1985) 299, "Is the Superstring Semiclassical?," in: *Unified String Theories*, eds: M.B. Green and D.J. Gross (World Scientific, 1986).

[13] R. Rohm, "Spontaneous Supersymmetry Breaking in Supersymmetric String Theories," *Nucl. Phys.* **B237** (1984) 553.

[14] H.B.G. Casimir, "On the Attraction Between Two Perfectly Conducting Plates," *Proc. Kon. Nederl. Akad. Wet.* **51** (1948) 793.

[15] M.B. Green, J.H. Schwarz and E. Witten, *Superstring Theory* (Cambridge U. Press, 1987), Vol. 2, Appendix 8.A.

[16] T. Banks and L. Susskind, "Brane – Anti-Brane Forces," hep-th/9511194.

[17] A. Sen, "Universality of the Tachyon Potential," *JHEP* **9912** (1999) 027, hep-th/9911116; A. Sen and B. Zwiebach, "Tachyon Condensation in String Field Theory," hep-th/9912249.

[18] P. Yi, "Membranes from Five-Branes and Fundamental Strings from Dp Branes," *Nucl. Phys.* **B550** (1999) 214, hep-th/9901159.

[19] E. Witten, "Topological Tools in Ten-Dimensional Physics," *Int. J. Mod. Phys.* **A1** (1986) 39, also in: *Unified String Theories*, eds: M.B. Green and D.J. Gross (World Scientific, 1986).

[20] H. Kawai, D.C. Lewellen and S.-H.H. Tye, "Classification of Closed Fermionic String Models," *Phys. Rev.* **D34** (1986) 3794.

[21] L.J. Dixon and J.A. Harvey, "String Theories in Ten Dimensions Without Spacetime Supersymmetry," *Nucl. Phys.* **B274** (1986) 93.

[22] J.A. Harvey, P. Hořava and P. Kraus, to appear.

[23] E. Witten, "Instability of the Kaluza-Klein Vacuum," *Nucl. Phys.* **B195** (1982) 481.

[24] C.W. Misner, K.S. Thorne and J.A. Wheeler, *Gravitation* (Freeman, New York, 1973).

[25] P. Hořava, "Two-Dimensional Stringy Black Holes with One Asymptotically Flat Domain," *Phys. Lett.* **B289** (1992) 293, hep-th/9203031.

[26] S. Coleman, "The Uses of Instantons," in: *Aspects of Symmetry* (Cambridge U. Press, 1985).

[27] J.A. Harvey, P. Hořava and P. Kraus, "D-Sphalerons and the Topology of String Configuration Space," hep-th/0001143.

[28] N. Arkani-Hamed, S. Dimopoulos, G. Dvali and N. Kaloper, "Manyfold Universe," hep-th/9911386.