AIP | The Journal of Chemical Physics

Spectroscopy in LiquidRareGas Solvents. Infrared Spectra of CH4 in Argon and of HCl in Xenon

Joel Kwok and G. Wilse Robinson

Citation: The Journal of Chemical Physics **36**, 3137 (1962); doi: 10.1063/1.1732442
View online: http://dx.doi.org/10.1063/1.1732442
View Table of Contents: http://scitation.aip.org/content/aip/journal/jcp/36/12?ver=pdfcov
Published by the AIP Publishing

Articles you may be interested in

Excitation and emission spectra of rubidium in rare-gas thin-films
J. Chem. Phys. **137**, 014507 (2012); 10.1063/1.4730032

Measuring diffusivity in supercooled liquid nanoscale films using inert gas permeation. II. Diffusion of Ar, Kr, Xe, and CH 4 through Methanol
J. Chem. Phys. **133**, 174505 (2010); 10.1063/1.3497648

Infrared-active vibron bands associated with rare gas atom dopants isolated in solid parahydrogen
Low Temp. Phys. **33**, 487 (2007); 10.1063/1.2746234

Simulating the photoelectron spectra of rare-gas clusters
J. Chem. Phys. **122**, 244717 (2005); 10.1063/1.1931527

Electronic spectroscopy of toluene–rare-gas clusters: The external heavy atom effect and vibrational predissociation
J. Chem. Phys. **122**, 194315 (2005); 10.1063/1.1899155

AIP | Chaos
CALL FOR APPLICANTS
Seeking new Editor-in-Chief

This article is copyrighted as indicated in the article. Reuse of AIP content is subject to the terms at: http://scitation.aip.org/termsconditions. Downloaded to IP: 131.215.70.231 On: Thu, 09 Oct 2014 17:12:26

spectral resolution of about 0.03 cm^{-1}. The absorption cell was of the White type, giving a path of 3.5 m. The CD_4 pressure was 3 cm of Hg. Absolute line positions were determined with an estimated error of 0.02 cm^{-1}.

The observed spectrum of CD_4 between 4430 and 4550 cm^{-1} is reproduced in Fig. 1. It consists of single P, Q, and R branches with sizable tetrahedral fine structure splittings. This spectrum bears a striking resemblance to $2\nu_3$ of CH_4,[2] except that in the latter case the tetrahedral splittings are extremely small. In contrast, the large number of lines of the much richer spectrum $2\nu_4$ of CH_4[1] cannot be accounted for by the tetrahedral fine structure lines of *single* P, Q, and R branches. In Table I are listed the measured lines of $2\nu_3$ of CD_4.

A detailed theoretical investigation of this spectrum has been made.[4] Single infrared-active P, Q, and R branches are in fact predicted in the limit in which the separation between the E and F_2 vibrational substates of $2\nu_3$ is large compared with the Coriolis splittings arising from the $2B\zeta_3(\mathbf{P}\cdot\mathbf{l}_3)$ term. It is interesting to compare the observed fine structure patterns with the universal relative splittings predicted by theory in dominant approximation[3] which holds for all states having the rotational angular momentum as a good quantum number. This comparison is given in Table II, along with the relative splittings for some other vibrational states. In the theoretical account of $2\nu_3$ of CD_4 it is shown that the agreement with dominant approximation is to be expected even though the rotational angular momentum is *not* a good quantum number.

There is a set of comparatively weak lines with somewhat regular spacing, which are in the region of 4525 to 4535 cm^{-1}. These are broader than the other lines of the spectrum, and have irregular shapes. No contaminant has been found to which these lines can be ascribed,[5] and their origin remains a troublesome point.

[4] K. Fox, thesis, University of Michigan (1961). A detailed account will be published.

[5] A spectrum of the same region (E. D. Palik, private communication, 1960), with the CD_4 produced by a different chemical reaction, also shows these lines.

THE JOURNAL OF CHEMICAL PHYSICS VOLUME 36, NUMBER 12 JUNE 15, 1962

Spectroscopy in Liquid-Rare-Gas Solvents. Infrared Spectra of CH_4 in Argon and of HCl in Xenon*

JOEL KWOK AND G. WILSE ROBINSON†

Gates and Crellin Laboratories of Chemistry,‡ California Institute of Technology, Pasadena California

(Received November 24, 1961)

A low-temperature cell employing barium fluoride windows and indium metal gaskets has been built and is being used for the study of rotational, vibrational, and electronic motions of molecules in liquid rare gases. The ν_3 fundamental of CH_4 in liquid argon shows a single, relatively sharp Q branch. The P and R branches are probably present but apparently are lost in the wings of the Q branch. The infrared spectrum near 3.5 μ of HCl in liquid xenon shows well-resolved P, Q, and R branches, but the individual rotational lines are not resolved. The O branch is not resolved from the tail of the P branch, but there is some indication of the S branch on the high-frequency side of the spectrum. The Q branch is shifted 36 cm^{-1} to the low-frequency side of its gas-phase position. The appearance of O, Q, and S branches is expected because of the presence of an induced dipole moment through the polarizability of the solvent. The agreement between the observed spectrum and that anticipated on the basis of nearly free rotation gives good evidence for the existence of quantized rotational motions of HCl in liquid xenon.

I. INTRODUCTION

THE primary objective of this work is to obtain information concerning "local environments" in simple, dense fluids, such as argon, krypton, and xenon, through the study of rotational, vibrational, and electronic motions of dissolved solutes. If diffusional processes, i.e., large amplitude or random displacements, are very slow compared with the spectroscopic frequency, then the spectrum of the dissolved molecule is determined by the instantaneous configuration of its local environment. The observed spectrum is, of course, a superposition over the different local environments of all the solute molecules. On the other hand, if the measuring process is slow compared with random fluctuations, then the spectrum will be determined by the time average of the environmental perturbations. Recent neutron diffraction experiments[1] apparently

* Supported in part by the National Science Foundation and the U. S. Army Research Office.

† Alfred P. Sloan Fellow.

‡ Contribution No. 2781.

[1] C. T. Chudley and R. J. Elliott, Proc. Phys. Soc. (London) 77, 353 (1961).

This article is copyrighted as indicated in the article. Reuse of AIP content is subject to the terms at: http://scitation.aip.org/termsconditions. Downloaded to IP: 131.215.70.231 On: Thu, 09 Oct 2014 17:12:26

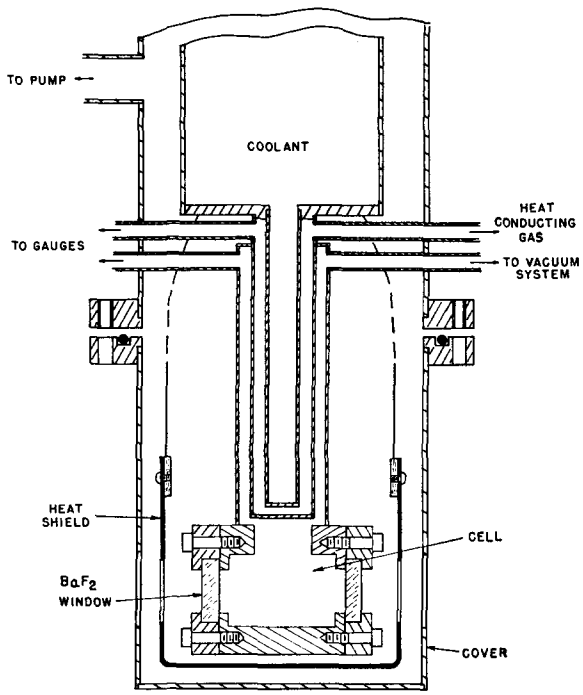

FIG. 1. Low-temperature infrared cell for liquid studies. The temperature of the cell may be adjusted by changing the thermal contacts to the copper heat shield, by varying the pressure of the conducting gas, and by changing the coolant.

indicate that the frequency of local density fluctuations in a liquid is low compared with oscillatory frequencies of the atoms or molecules about equilibrium positions in the liquid structure. This seems intuitively reasonable since the atoms or molecules in a liquid are bound by a potential energy of the order of the heat of vaporization, and this is about ten times larger than kT at the normal melting point of most nonpolar liquids. Thus, it appears that in the present experiments, a good assumption would be that the frequency of the measuring process, i.e., the internal vibrations, is high compared with the frequency of local density fluctuations. There are then four mechanisms responsible for spectral broadening. Different local environments in the fluid provide different intermolecular potentials, and the superposition of spectra of solute molecules in these different fields gives rise to broadening or even to line multiplicity in some instances.[2] In addition, the Franck-Condon effect with respect to quasi-lattice vibrations gives line broadening which results from a superposition of transitions involving the finely spaced vibrational levels of the solvent. In a pure liquid, rapid resonance transfer of vibrational or rotational excitation to neighboring molecules might give an important contribution to line broadening, and uncertainty broadening caused by short vibrational or rotational relaxation times might also contribute a few cm^{-1} to the vibrational or rotational line breadths. Lastly, the splitting of degeneracies due to asymmetric fields may be important.

Quantized rotation in the liquid phase has rarely been reported, not because, necessarily, molecules cannot undergo rotational motions in the liquid state, but because the various broadening mechanisms do not allow resolution of the individual rotational lines. It is therefore to be expected that only small molecules having large rotational constants will give resolvable spectra. The case of H_2[3,4] serves as the best example. Structure observed in previous solution spectra of the hydrides NH_3,[5] H_2O,[6,7] HCl,[8–11] and CH_4[12] could also be interpreted as arising from quantized rotational motions. Similar results have been obtained in the gas phase using high pressures.[13,14] The present paper will give further evidence which supports this view in the case of HCl in a very simple liquid solvent.

II. EXPERIMENTAL

A diagram of the apparatus is shown in Fig. 1. For the present experiments barium fluoride windows sealed to the cell by means of flange fittings and indium metal gaskets were employed. More reliable vacuum seals are obtained if the rims of the windows are first coated with platinum or gold[15] and the cell surfaces are "tinned" with indium metal. The cell is capable of withstanding pressures up to at least 15 atm so that the liquid range of the rare gases can be extended substantially beyond that possible at 1 atm. Argon, krypton, and xenon then form a useful set of liquid solvents over the entire temperature range −182° to −55° C. In the present experiments it was found unnecessary to use pressures higher than 6 atm. The path length of the cell is 5 cm, and the solute–solvent mole ratio necessary to obtain adequate absorption was found to be less than 0.001. Because of the small mole

[2] G. W. Robinson, Mol. Phys. **3**, 301 (1960); and unpublished work by J. Kwok and G. W. Robinson on the electronic spectrum of Hg in liquid Xe, CO_2, and cyclohexane which also shows line doubling.

[3] J. C. McLennan and J. H. McLeod, Nature **123**, 160 (1929).
[4] E. J. Allin, W. F. J. Hare, and R. E. MacDonald, Phys. Rev. **98**, 554 (1955); W. F. J. Hare, E. J. Allin, and H. L. Welsh, *ibid.* **99**, 1887 (1955); E. J. Allin, T. Feldman, and H. L. Welsh, J. Chem. Phys. **24**, 1116 (1956).
[5] A. Langseth, Z. Physik. **77**, 60 (1932).
[6] E. L. Kinsey and J. W. Ellis, Phys. Rev. **51**, 1074 (1937).
[7] L. B. Borst, A. M. Buswell, and W. H. Rodebush, J. Chem. Phys. **6**, 61 (1938).
[8] W. West and R. T. Edwards, J. Chem. Phys. **5**, 14 (1937).
[9] M. O. Bulanin and N. D. Orlova, Optika i Spektroskopiya **4**, 569 (1958).
[10] W. J. Jones and N. Sheppard, Trans. Faraday Soc. **56**, 625 (1960).
[11] J. Lascombe, P. V. Huong, and M. Josien, Bull. soc. chim. France, p. 1175 (1959).
[12] M. F. Crawford, H. L. Welsh, and J. H. Harrold, Can. J. Phys. **30**, 81 (1952).
[13] R. Coulon, L. Galatry, B. Oksengorn, S. Robin, and B. Vodar, J. phys. radium **15**, 641 (1954).
[14] H. L. Welsh, M. F. Crawford, and J. L. Locke, Phys. Rev. **76**, 580 (1949).
[15] By vacuum sublimation or by thermal treatment of organometallic solutions distributed by Hanovia Liquid Gold Division of Engelhard Industries, Inc., 1 West Central Ave., East Newark, New Jersey.

This article is copyrighted as indicated in the article. Reuse of AIP content is subject to the terms at: http://scitation.aip.org/termsconditions. Downloaded to IP: 131.215.70.231 On: Thu, 09 Oct 2014 17:12:26

ratios used, it is not expected that solute–solute interactions play a significant role in the determination of the spectral line shapes.

The cell was constructed so that it would fit in the optical path of either a Perkin-Elmer model 21 or a Beckman IR-7 infrared spectrometer. The Beckman instrument was used to obtain the spectra discussed in this paper. Scanning speeds and slitwidths were chosen so that the instrument resolution was better than 2 cm^{-1}, a value which is more than adequate for resolution of the J structure in the CH_4 and HCl vapor-phase spectra.

As a result of outgassing or an extremely small leak in the vacuum connections to the Dewar, a very small amount of ice condensed on the cell windows. This condensate could not be detected visually, but its presence is revealed by an absorption band in the 3200 cm^{-1} region.

III. CH_4 IN LIQUID ARGON

The 3020 cm^{-1} ν_3 fundamental of CH_4 in liquid argon at $T \approx 100°$ K is shown in Fig. 2 and compared with the theoretical spectrum of the vapor at this temperature. Spin equilibrium is not assumed.[16] In analogy with the vapor-phase spectrum,[17] a strong Q branch occurs. The absorption in the vicinity of the Q branch maximum becomes very broad as the concentration of CH_4 is increased. The P and R branches probably contribute to this broadening, but they are not easily discernible as separately resolved components in the wings of the Q branch. The absence of good resolution of rotational branch structure in this case is therefore probably in part due to the dominance of Q branch intensity in the vicinity of the band origin.

Another reason why the resolution of structure in this system is made difficult may be associated with the fact that the excited level of the transition is triply degenerate. Local fields having low symmetry will remove the degeneracy to an extent depending upon the strength of the field in the region of each methane molecule. If the perturbations are large compared with the rotational line spacing, the rotational lines cannot be resolved.

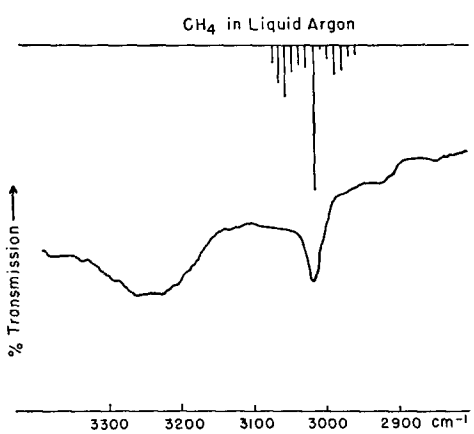

FIG. 2. The infrared spectrum of CH_4 dissolved in liquid argon at $T \approx 100°$K. The absorption near 3200 cm^{-1} is due to ice.

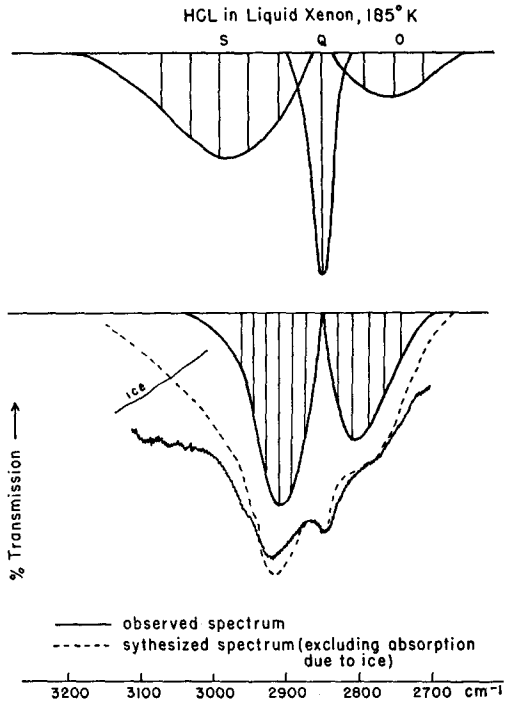

FIG. 3. The infrared spectrum of HCl dissolved in liquid xenon at $T \approx 185°$K. The synthesized spectrum is a superposition of O, P, Q, R, and S branches. The relative intensities of the P and R branches are those for the infrared spectrum of HCl vapor at $T = 185°$K. The relative intensities of the S, Q, and O branches are those for the Raman spectrum of the vapor at the same temperature. The relative intensity of the Q branch with respect to the R and P branches was chosen so as to best fit the observed spectrum. The intensities are somewhat approximate, since broadening of the branches and intensity perturbations by the solvent were not taken into account.

Because of the difficulties associated with finding a polyatomic molecule suitable for the study of rotational structure in its solution spectrum, the choice of a diatomic molecule in a rare-gas solvent was made. The infrared spectrum of HCl in liquid xenon is discussed in the next section.

IV. HCl IN LIQUID XENON

The spectrum of HCl in liquid xenon at about 185° K is shown in Fig. 3, where it is compared with a theoretical gas-phase spectrum at the same temperature. The theoretical infrared spectrum is calculated according to formulas given by Herzberg,[18] and the induced spectrum which is Raman-like is obtained from formulas given by Placzek and Teller.[19] The most obvious interpretation of the structure is that it is the

[16] H. J. Childs and H. A. Jahn, Proc. Roy. Soc. (London) **A169**, 451 (1939).
[17] A. H. Nielsen and H. H. Nielsen, Phys. Rev. **48**, 864 (1935).
[18] G. Herzberg, *Spectra of Diatomic Molecules* (D. Van Nostrand Company, Inc., Princeton, New Jersey, 1950) 2nd ed., p. 126.
[19] G. Placzek and E. Teller, Z. Physik **81**, 209 (1933).

This article is copyrighted as indicated in the article. Reuse of AIP content is subject to the terms at: http://scitation.aip.org/termsconditions. Downloaded to IP: 131.215.70.231 On: Thu, 09 Oct 2014 17:12:26

superposition of $O(\Delta J=-2)$, $P(\Delta J=-1)$, $Q(\Delta J=0)$, $R(\Delta J=+1)$, and $S(\Delta J=+2)$ branches associated with the HCl fundamental. Previous work[8–11] carried out on HCl in solution could not so easily lay itself open to such an interpretation, because the solvents were much more complicated than liquid xenon. However, except for variations in the Q-branch intensity, many of the earlier spectra are very similar to the spectrum observed here, and it is very likely that the structure in all cases is caused by "not-too-highly-hindered rotation" of HCl in these solutions. The S and O branches are too spread out to be resolved from the tails of the R and P branches. A slight change of slope observed on the high-frequency side of the R branch is probably caused by the S branch. The appearance of the O, Q, and S branches is expected since the presence of an induced dipole moment in the solute through external fields set up in the polarizable xenon environment can give rise to Raman selection rules.[20] The mechanism is similar to that by which infrared absorption by homonuclear diatomic molecules can occur in a high-density fluid.[13] For HCl, as for CH_4, the J structure is unresolved. Presumably, the presence of a variety of different local fields or the superposition of low-frequency quasi-lattice vibrations is sufficient to broaden lines by an amount which is large compared with the rotational line spacing, but which is not large compared with the separation of the branch maxima.

The Q branch is shifted 36 cm^{-1} to the low-frequency side of its gas-phase position at 2885.9 cm^{-1} [21] due to the usual dipole–induced–dipole and dispersion interactions. Buckingham[22] has given an expression for solvent shifts of vibrational transition energies. His more general expression for the relative change in angular frequency reduces to a power series,

$$\frac{\Delta\omega}{\omega}=C_0+C_1\left(\frac{\epsilon-1}{2\epsilon+1}\right)+C_2\left(\frac{\epsilon-1}{2\epsilon+1}\right)^2+\cdots, \qquad (1)$$

in terms of the solvent dielectric constant ϵ when Onsager's[23] model for calculating the reaction field is employed. The term involving C_1 is the so-called Kirkwood–Bauer–Magat formula,[24] and it has been found that this term is adequate to describe shifts of HCl in other solvents.[8]

It is known that reasonably good values for the dielectric constants of liquids, whose molecules interact only weakly, may be obtained from the Clausius–Mossotti equation,

$$\frac{4\pi N}{3}\alpha=\frac{\epsilon-1}{\epsilon-2}\frac{M}{d}, \qquad (2)$$

where N is Avogadro's number and M is the molecular weight. If the polarizability[25] α of atomic xenon and the density[26] d of liquid xenon are taken to be 4.0×10^{-24} cm^3 and 3.09 g cm^{-3}, respectively, Eq. (2) gives $\epsilon=1.93$. The reliability of Eq. (2) can be demonstrated for molecules such as CCl_4. It has also been shown experimentally for a rare gas,[27] argon, that deviations from Eq. (2) are indeed slight. Using the calculated value of ϵ and the empirical value of 0.06 for C_1,[8] one obtains a shift of -33 cm^{-1}. A value of 0.088 for C_1 has also been quoted by Josien *et al.*[28] This would give a shift of -48 cm^{-1}. Considering the approximations used, these values agree well with the observed shift of about -36 cm^{-1}. The agreement lends support to the validity of the assignment of the maxima.

One might argue that the maxima in the HCl–Xe spectrum are the result of combination librational or translational frequencies. It is very unlikely that the translational motions can account for the two side bands, since the frequency separations seem too small when account is taken of the high heats of vaporization of xenon and of HCl. Combination bands involving the quasi-lattice modes may occur. The separations of the side bands from the central band are about 75 cm^{-1}, while the Debye maximum frequency in solid xenon is only about 38 cm^{-1}.[29] The maximum lattice frequency for an HCl molecule in a xenon cage may be higher than 38 cm^{-1}, however, since the Debye frequency is of the order of 90 cm^{-1} [29] for pure solid HCl. Therefore, on the basis of the frequency separation in HCl alone, it would be difficult to rule out solvent combination bands as a possible cause of the side bands. However, the fact that the spectrum of DCl in solution[8] shows a decreased separation of the maxima cannot easily be explained on the basis of solvent frequencies.

That the structure is caused by highly hindered rotation of HCl is less likely here than for the case of a molecular solvent, considering the large "cavity" presented by xenon, coupled with the fact that the electronic charge density around each xenon atom is relatively much more simple than that in a molecular solvent. Certainly our arguments here are made stronger by the virtual absence of any side bands in the CH_4–argon spectrum. In addition, the good agreement between the observed spectrum and that anticipated on the basis of nearly free rotation gives, we believe, good evidence for the existence of quantized rotational motions of HCl in liquid xenon.

[20] E. U. Condon, Phys. Rev. **41**, 759 (1932).
[21] C. F. Meyer and A. A. Levin, Phys. Rev. **34**, 44 (1929).
[22] A. D. Buckingham, Proc. Roy. Soc. (London) **A248**, 169 (1958).
[23] L. Onsager, J. Am. Chem. Soc. **58**, 1486 (1936).
[24] See reference 8, where this formula is given. See also H. Bauer and M. Magat, J. phys. radium **9**, 319 (1938).
[25] H. H. Landolt and R. Börnstein, *Zahlenwerte und Functionen* (Springer-Verlag, Berlin, 1950), Vol. I, part 1, p. 401.
[26] Calculated from the specific volume quoted by J. A. Campbell and J. H. Hildebrand, J. Chem. Phys. **11**, 334 (1943).
[27] G. O. Jones and B. L. Smith, Phil. Mag. **5**, (52), 355 (1960).
[28] M. Josien, M. G. Sourisseau, and C. Castinel, Bull. soc. chim. France **178**, 1539 (1955).
[29] E. A. Moelwyn-Hughes, *Physical Chemistry* (Pergamon Press, New York, 1957), p. 104.

This article is copyrighted as indicated in the article. Reuse of AIP content is subject to the terms at: http://scitation.aip.org/termsconditions. Downloaded to IP: 131.215.70.231 On: Thu, 09 Oct 2014 17:12:26