Measurement of the THz comb with a spectrum analyzer

In addition to the time domain measurements reported in the main manuscript, we also measured the tooth width with a spectrum analyzer. The experimental setup is shown below. Over a 66 second acquisition time, we measure a THz tooth width of 12 kHz (15 mHz RF tooth width), at 1.4 THz. This corresponds to a bin-limited width, so that the true width is ≤12 kHz.

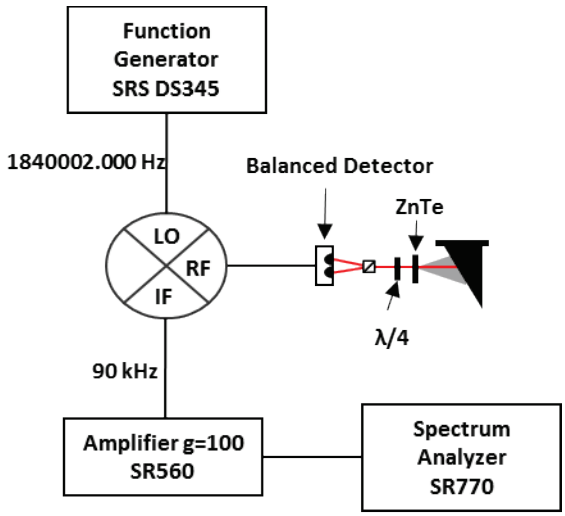

The output of the balanced detector was mixed with a function generator, amplified, and detected with a baseband spectrum analyzer. The absolute frequency of the tooth was verified by shifting the LO. The measurement window was 6.1 Hz with 15.2 mHz bins, and an acquisition time of 66 seconds. The raw data are shown below (left). The second plot shows a zoomed out view on the spectrum analyzer with multiple comb teeth visible (USB = upper sideband, LSB = lower sideband).

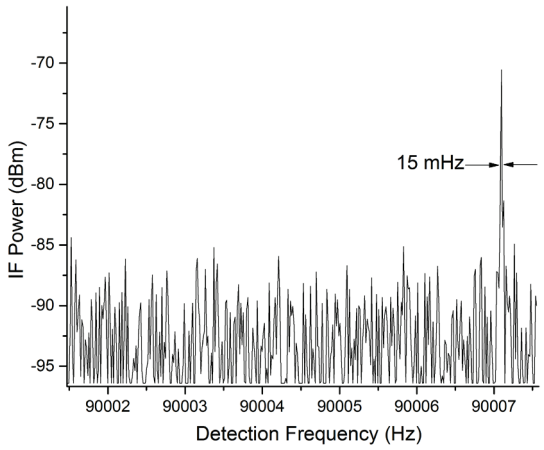

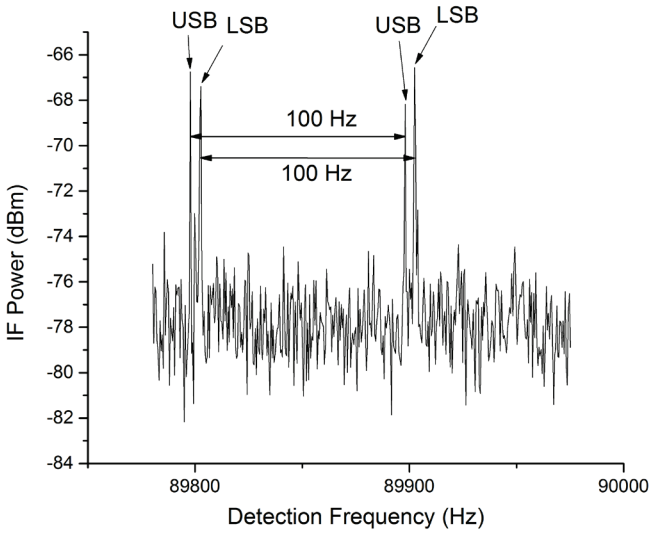

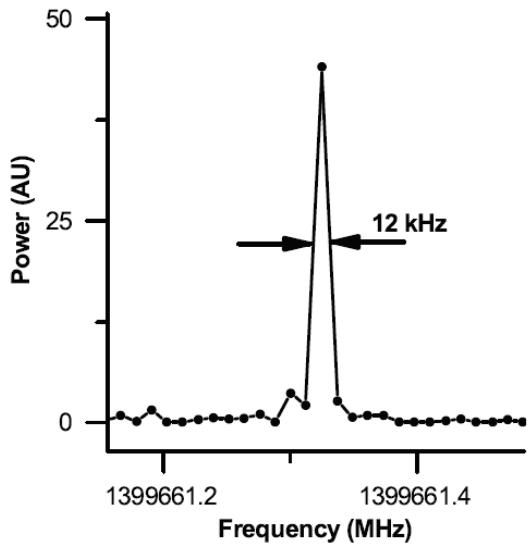

Analysis of laser drift on the tooth-width measurement

There are two sources of broadening in the measurement of the comb tooth width of the THz comb: uncorrelated and correlated changes in the repetition rates of the pump and probe lasers. In this supplementary material we address how these changes affect the measured tooth width.

Uncorrelated changes

For uncorrelated changes, either the pump or probe lasers change repetition rate during the course of a measurement.

If the repetition rate of the pump is f_m, the repetition rate of the probe is f_s, and the pump laser drifts by Δf_m, the frequency shift in the nth comb tooth is given by:

$$frequency\ shift = n(f_m - f_s) - n(f_m - f_s - \Delta f_m) = n\Delta f_m$$

For example, if the pump laser changes by 1 Hz, the change in the 25000th tooth (at 2 THz) is 25000*1 Hz = 25 kHz. Thus, we can show that the error in the fractional uncertainty in the pump repetition rate $\Delta f_m / f_m$, is equal to the fractional uncertainty of the nth comb tooth, $\Delta f_{nTHz} / f_{nTHz}$:

$$\Delta f_{nTHz} / f_{nTHz} = n\Delta f_m / n f_m = \Delta f_m / f_m$$

where Δf_{nTHz} is the measured uncertainty in the frequency of the nth THz comb tooth, and f_{nTHz} is the frequency of the nth tooth. Or, in our above example 25 kHz/2 THz = 1 Hz/80 MHz = 1.25 * 10^-8.

However, the THz comb is measured as an RF comb, with the frequency of the nth tooth given by f_{nRF}:

$$f_{nRF} = \mathrm{n} * (f_m - f_s)$$

The frequencies of the RF comb teeth are related to those of the THz comb by:

$$\frac{f_{nRF}}{f_m - f_s} = \frac{f_{nTHz}}{f_m}$$

$$f_{nRF} = \frac{f_m - f_s}{f_m} f_{nTHz}$$

The measured uncertainty of the RF comb (for small changes in f_m) is then:

$$\Delta f_{nRF} = \mathrm{n} * (f_m - f_s - \Delta f_m) \quad ,$$

and an error of 25 kHz at 2 THz in the above example will be measured as an error of 25 kHz in the RF comb at 2.5 MHz.

With the same logic, we can write the expressions for changes in the probe laser repetition rate. Thus for a shift in either the pump laser or the probe laser, we will measure an equal shift in the RF comb.

<u>Correlated changes</u>

Next, we consider correlated changes, in which the frequency of the master changes and the slave is accordingly moved by the lock circuit. To fully understand these drifts, we must consider the lock circuit of the measurement:

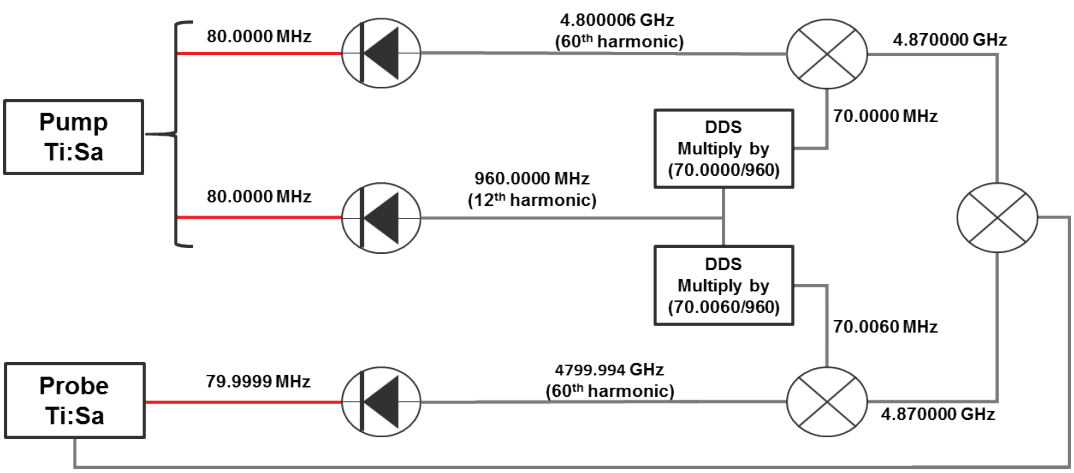

A key concept in considering the lock circuit is that the offset between the pump and probe lasers is provided by two direct digital synthesizers (DDS) that are given a common sample clock from the pump laser. In fact, the offset is technically not an offset frequency, but the difference between two division factors of the pump laser set by the DDS boards.

To derive the measured shift in the RF comb, let us start with f_m = 80.0000 MHz. Before running an experiment, the frequency of the pump laser is measured with a frequency counter referenced to a

Rubidium standard, and a division factor (frequency tuning word) is given to the both DDS boards in the above circuit. The sample clock of the DDS boards is 960 MHz (the 12th harmonic of 80 MHz), and the needed frequency for the lock circuit is 70.0000 MHz for first board (multiply by 70.0000/960) and 70.0060 MHz for the second board (multiply by 70.0060/960). Note the 60 kHz offset in the output frequencies of the two DDS boards. The output of the first board is mixed with the 60th harmonic of the pump laser, to generate a probe signal at 4.870000 GHz. The output of the second board is mixed with the 60th harmonic of the probe laser, to generate a pump signal with a 60 kHz offset. The pump and probe signals are compared in a final mixer, which controls the repetition rate of the probe oscillator. Finally, a 60 kHz difference in the 60th harmonic of the two lasers corresponds to a 100 Hz difference in repetition rate. Thus, the offset can be calculated by differencing the outputs of the two DDS boards and dividing by 60. When the probe laser has been successfully locked to the pump laser, it now is slaved to a repetition rate of 79.9999 MHz, or f_m – 100 Hz.

Now we consider how this circuit is affected by a change in the pump laser repetition rate. If the pump laser is shifted by 5 Hz, the fractional shift of any tooth in the THz comb is given by 5 Hz/(80 MHz) = 6.25E-8. If we trace this change through the above circuit we will find that the difference of the output of the DDS boards is given by:

$$\begin{aligned} DDS\ difference\ output \\ &= \frac{(80\ MHz + 5\ Hz) * 12 * (70.0060\ \ MHz)}{960\ MHz} \\ &- \frac{(80\ MHz + 5\ Hz) * 12 * (70.0000\ MHz)}{960\ MHz} = 6000.000375\ kHz \end{aligned}$$

So the new offset is now:

$$f_m - f_s\ = \frac{6000.000375\ \mathrm{Hz}}{60} = 100.00000625\ \mathrm{Hz}$$

Finally, we can calculate the fractional shift of our RF comb as:

$$\frac{\Delta f_{nRF}}{f_{nRF}}\ = \frac{\mathrm{n} * 0.00000625\ \mathrm{Hz}}{\mathrm{n} * 100.00000000\ \mathrm{Hz}} = 6.25\mathrm{E} - 8$$

But, this is the original uncertainty in the THz comb! Thus, by example, we have shown that the fractional uncertainty of the THz comb is equal to the fractional uncertainty of the RF comb:

$$\frac{\Delta f_{nRF}}{f_m - f_s}\ = \frac{\Delta f_{nTHz}}{f_m}$$

<u>Conclusions</u>

With the above derivations we have demonstrated that the *fractional* uncertainty of the RF comb is equal to the *fractional* uncertainty of the THz comb for correlated changes, and that the *direct* uncertainty of the RF comb is equal to the *direct* uncertainty of the THz comb for uncorrelated changes. Therefore, we can measure the uncorrelated linewidth of the comb as the direct linewidth of the RF

comb and we can measure the correlated linewidth of the nth THz comb tooth by measuring the nth RF comb tooth and multiplying by the factor $\frac{f_m}{f_m - f_s}$. In this letter we have measured an uncorrelated linewidth<<correlated linewidth, as our peaks change in response to correlated changes. Thus, we take a conservative measurement of linewidth by multiplying all RF comb linewidths by $\frac{f_m}{f_m - f_s}$, as this mechanism generates a linewidth ~10^5x larger.