Polarization of the Recoil Proton from π^0 Photoproduction in Hydrogen*

J. O. MALOY†
California Institute of Technology, Pasadena, California

G. A. SALANDIN
Istituto di Fisica dell'Universita, Padova, Italy; and Istituto Nazionale di Fisica Nucleare, Sezione di Padova, Italy

A. MANFREDINI AND V. Z. PETERSON‡
Istituto di Fisica dell'Universita, Roma, Italy; and Istituto Nazionale di Fisica Nucleare, Sezione di Roma, Italy

AND

J. I. FRIEDMAN§ AND H. KENDALL
Stanford University, Palo Alto, California

(Received January 9, 1961)

The $D_{\frac{3}{2}}$ nature of the second resonance in neutral single pion photoproduction, $\gamma+p\rightarrow p+\pi^0$, suggested by Peierls, has been confirmed by additional experimental observations of the polarization of the recoil proton over a range of photon energies. The photon energy dependence of the polarization at 90° c.m. is in substantial disagreement with alternative models suggested by Stoppini and Pellegrini, and Landovitz and Marshall if the observed angular distributions are also considered. An experimental method using nuclear emulsion as scatterer-detector, in conjunction with a magnetic spectrometer, is shown to have both good energy resolution and reasonable counting rate.

STEIN has shown that the recoil proton in the process $\gamma+p\rightarrow\pi^0+p$ has a large polarization at 90° in the center-of-mass system and at laboratory photon energies of 500 and 700 Mev.[1] Such large values of the polarization are unlikely unless the second maximum in the photoproduction process, at a photon energy of 750 Mev, arises from resonant production in a state of odd parity, opposite to the parity of the first resonance.[2]

We have taken advantage of the high beam intensity of the Stanford Linear Accelerator, and have measured the polarization of magnetically selected recoil protons using nuclear emulsion as scatterer and detector. The experimental arrangement is shown in Fig. 1. The electron beam of the linear accelerator struck a copper radiator 0.017 radiation length thick, placed directly in front of a steel-walled liquid hydrogen target. Protons emitted from the target were collimated by lead slits (aperture: 2.2° wide, 6.6° high), and were magnetically deflected in the vertical plane and focused into a stack of nuclear emulsion by the 36-in. 180° double-focusing spectrometer described by Hofstadter.[3] The proton spin precessed an average of 555° in passing through the spectrometer, so that if the moment pointed up at the entrance it pointed down, 15° from the vertical, at the exit. The focusing and precession magnified the 3.3° dispersion of the moments at the entrance to 22°. The spectrometer current was adjusted to focus positive particles of 540 Mev/c momentum, with a momentum spread across the emulsion stack of 0.8%. The exposure conditions are given in Table I; other exposures, not yet analyzed, were made as well.

Recoil protons from multiple pion production were not accepted by the spectrometer. The electron beam passed through the hydrogen target, so that recoil protons were accepted from electron scattering with neutral pion production, in the reaction $e+p\rightarrow e^-+p+\pi^0$, from the elastic scattering of electrons which previously lost energy in the radiator, and from inelastic electron scattering with photon emission. The first process is essentially identical to photoproduction[4–6]; we estimate that the uncertainty in the measured polarization caused by differences between the two processes does not exceed 5%. The contributions

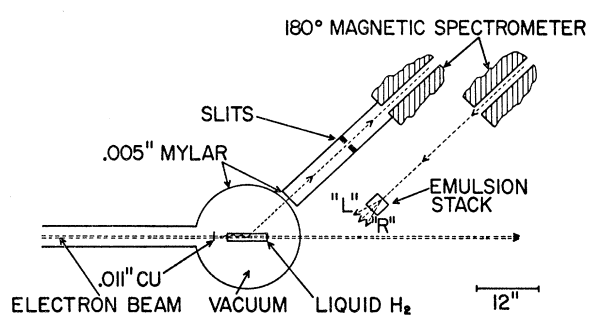

FIG. 1. Experimental arrangement, plan view. The precession of the proton moment is such that the usual definitions of "left" and "right" scatterings are interchanged.

* This work was supported in part by the U. S. Atomic Energy Commission, the U. S. Office of Naval Research, and the Italian National Committee for Nuclear Research (C.N.R.N.)

† International Business Machines Corporation Fellow, 1959–60.

‡ Present address: Massachusetts Institute of Technology, Cambridge, Massachusetts.

§ On leave of absence from the California Institute of Technology, 1959–60.

[1] P. C. Stein, Phys. Rev. Letters **3**, 473 (1959).

[2] J. J. Sakurai, Phys. Rev. Letters **1**, 258 (1958).

[3] R. Hofstadter, Revs. Modern Phys. **28**, 214 (1956).

[4] G. B. Yodh and W. K. H. Panofsky, Phys. Rev. **105**, 731 (1957); see also earlier papers by Panofsky, Newton, Woodward, and Yodh referred to in the quoted paper.

[5] W. K. H. Panofsky and E. A. Allton, Phys. Rev. **110**, 1155 (1958).

[6] R. H. Dalitz and D. R. Yennie, Phys. Rev. **105**, 1598 (1957).

from the other two processes, which involve only electromagnetic interactions, is known,[3,7] and was typically 15%. It is easily shown that the polarization of the recoil protons from these reactions is zero at high energy. The empty target background was 3.5%.

Feld and Maglić have measured the scattering asymmetry of 149-Mev polarized protons in emulsion by recording the numbers of tracks found at a depth of about 2 cm in emulsion and at projected angles of 5° or more to the left and right of the beam center. We have not found this technique to be useful, because we have discovered by following tracks that most of them (about 85% of those found at angles from 5° to 12° at a depth of 23 mm) undergo only multiple scattering.

The plates were scanned for single scattering events by three other methods: (1) by areas, at CalTech; (2) by following back wide-angle tracks found at a depth of 1 or 2 cm in emulsion, at Rome; (3) by the conventional track-following technique, at Padua.

The average detection efficiencies of each group were measured separately for left and right scattering, by repeated scanning, and by comparison of plates scanned by more than one group. The left and right efficiencies were found to be the same within statistics (about 5–10%) for all three groups. The error in the polarization from bias effects is at most 10%.

The polarization was calculated from the measured values of the energy, scattering angle, and angle between the normal to the scattering plane and the moment, using the method of maximum likelihood. The precession of the moment was estimated for each track from the observed dip in emulsion. The analyzing power of nuclear emulsion has been measured as a function of angle at 143, 115, and 91 Mev by Rutherglen.[9] The calibration of Feld and Maglić[8] was not used, because their results do not seem to be consistent at small angles (6°–12°) with measurements made on the pure elements, while those of Rutherglen are.

We have found by extensive grain-density and range measurements, made principally at Padua, that in most cases inelastic scattering with energy loss greater than about 30 Mev could be detected by inspection, from the change in grain density upon scattering. Corrections to the elastic analyzing power for inelastic scattering were found to be quite small, corresponding to 3% or less in the final values of the polarization. The large elastic-scattering cross section of the heavy elements in emulsion is responsible for the small size of the correction; much larger inelastic corrections can be expected in experiments using carbon scatterers with comparable energy resolution.

The polarizations obtained, corrected for inelastic scattering and background, are given in Table II. The results appear to be in good agreement with those of Stein,[1,10(b)] and with those currently being obtained at Frascati.[11] The present measurements have been ob-

TABLE I. Exposure conditions.

Electron energy (Mev)	Proton lab angle	Proton energy (Mev)	Lab photon energy (Mev)	Photon energy interval (Mev)	Pion c.m. angle
600	33.0°	138	450	30	109°
650	43.5°	143	585	35	86°
700	47.7°	143	660	50	77°

TABLE II. Polarization results. The polarizations are in the direction $\mathbf{k}\times\mathbf{p}$, where $\mathbf{k}$ and $\mathbf{p}$ are the momenta of the incident photon and recoil proton. The errors given include the uncertainty in the analyzing power.

Lab photon energy (Mev)	Scanning group (s)	Useful events	Polarization percent
450	CalTech	727	7±14
585	CalTech	959	56±14
660	CalTech, Rome, Padua	830	51±13

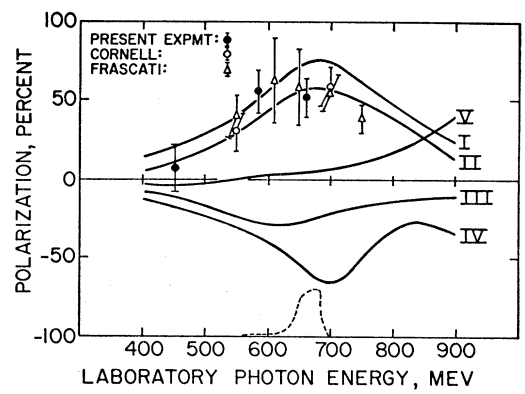

FIG. 2. Measured recoil proton polarizations compared with model calculations. The dotted curve at the bottom gives a typical resolution curve of the present experiment. The model calculations were made assuming an effective range formula for the resonant amplitudes and a real constant s-wave amplitude, chosen to fit the asymmetry in the angular distribution below the second resonance. The magnetic dipole, $j=\frac{3}{2}$ amplitude from the first resonance was included in all models. The other multipoles present in each model are given in the following table (j=total angular momentum, j=photon angular momentum, and E or M implies electric or magnetic radiation, respectively):

Model	Resonance energy Mev c.m.	Multipole: $E_{j\gamma,2j}$ or $M_{j\gamma,2j}$	E_{11} added?
I	600	$E_{13}(-)$	No
II	600	$E_{13}(-)$	Yes
III	600	$M_{13}(+)$	Yes
IV	600	$M_{13}(+)$	Yes
	900	$M_{25}(-)$	Yes
V	600	$M_{13}(+)$	Yes
	900	$M_{23}(-)$	Yes

[7] G. W. Tautfest and W. K. H. Panofsky, Phys. Rev. **105**, 1356 (1957).
[8] B. T. Feld and B. C. Maglić, Phys. Rev. Letters **1**, 375 (1958).
[9] J. Rutherglen, private communciation (to be published).
[10] R. F. Peierls, (a) Phys. Rev. Letters **1**, 174 (1958); (b) Phys. Rev. **118**, 325 (1960).
[11] Quoted by G. Salvini at 1960 Rochester Conference on High Energy Physics.

tained using an independent technique with much narrower photon energy resolution.

J. J. Sakurai[2] has predicted that large polarizations near 90° c.m. can only be obtained in this energy region by interferences between first and second pion resonances of opposite parity, as suggested by Peierls.[10] G. Stoppini and C. Pelligrini,[12] and L. F. Landovitz and L. Marshall,[13] suggested other models which might also give rise to appreciable polarizations, even if the two resonances were both of even parity.

One of us (J. O. M.) has investigated the nature of most of these models. A qualitative examination of the multipole expansions for the cross sections and polarizations was supplemented by numerical calculations using simple resonance formulas for the resonant amplitudes and phases. It was concluded that only the model suggested by Peierls, in which the second state has odd parity and is photoproduced by electric dipole radiation, can consistently explain the angular distributions and polarizations observed in π^0 photoproduction. The distributions appear to contain material contributions from nonresonant states and from the third resonance. In some of the models, the sign of the polarization is inconsistent with the signs of the interference terms in the angular distribution. The small size of the $\cos\theta$ term in the angular distribution was found to be correctly predicted by the Peierls model, especially when nonresonant s waves are included. Typical results are shown in Fig. 2.

[12] G. Stoppini and C. Pellegrini, Proceedings of the Ninth Annual Conference on High Energy Physics, Kiev, 1959 (unpublished).

[13] L. F. Landovitz and L. Marshall, Phys. Rev. Letters **3**, 190 (1959).

PHYSICAL REVIEW VOLUME 122, NUMBER 4 MAY 15, 1961

Kinematical and Dynamical Resonances*

A. O. Barut and K. H. Ruei†
Department of Physics, Syracuse University, Syracuse, New York

(Received January 16, 1961)

A method is given to distinguish between the solutions of the dispersion relations corresponding to kinematical and dynamical resonances. It consists of studying the resonance energy as a function of the coupling constant. The method is illustrated for potential scattering, for charged scalar meson theory, and for resonances due to unstable particles.

I

A RESONANCE in the scattering of elementary particles is called *kinematic* if it is due to an intermediate unstable particle. In the description of such a resonance the unstable particle is put into the theory to begin with; in more conventional field theories a new field is introduced for the new particle. In contrast to this, a *dynamical resonance* arises solely from the nature of forces between the initial interacting particles and therefore must come out automatically from the dynamical equations without introducing a new particle.

In view of the discovery of several new resonances[1] in the strong interactions of mesons and hyperons, it is desirable to characterize these two types of resonances more fully and to distinguish them both theoretically and experimentally. An experimental characterization has been given by Chew[2] according to which the phase shift will change sign near the resonance if it is due to an unstable particle and for a dynamical resonance the phase shift, in general, will not change sign. Unfortunately, the dispersion theoretical treatment of the strong interactions does not distinguish between kinematical and dynamical resonances. This is due to a well-known ambiguity[3] of the solutions of the dispersion relations. The so-called extra solutions of the dispersion relations can be shown to have resonance character and to correspond to unstable intermediate states.[4] The question has been raised whether conventional field theories can produce any resonances or whether the observed resonances are due to the unstable particles[4] (composite, elementary, or excited states). If the second alternative is true, we may conjecture that the failure of the perturbation theory in strong interactions is not due to the largeness of the coupling constant but to the fact that hitherto such unstable intermediate states have not been considered.

In this note we give a method to characterize and distinguish the kinematical and dynamical resonances,

* Supported in part by the Air Force Office of Scientific Research.

† Now at Essex College, Windsor, Ontario, Canada.

[1] M. Alston *et al.*, Phys. Rev. Letters **5**, 520 (1960); A. Abashian *et al.*, *ibid.* **5**, 258 (1960); M. Ferro-Lussi *et al.*, Bull. Am. Phys. Soc. **5**, 509 (1960).

[2] G. F. Chew, University of California Radiation Laboratory Report UCRL-9289 (unpublished), p. 56.

[3] L. Castillejo, R. H. Dalitz, and F. Dyson, Phys. Rev. **101**, 453 (1956).

[4] See for example, A. O. Barut and K. H. Ruei, Nuclear Phys. **21**, 300 (1960).