DIVISION OF THE HUMANITIES AND SOCIAL SCIENCES

CALIFORNIA INSTITUTE OF TECHNOLOGY

PASADENA, CALIFORNIA 91125

STRATEGIC UNCERTAINTY AND UNRAVELING IN MATCHING MARKETS

Federico Echenique
California Institute of Technology

Juan Sebastián Pereyra
El Colegio de México

SOCIAL SCIENCE WORKING PAPER 1373

April 15, 2013

Strategic Uncertainty and Unraveling in Matching Markets

Federico Echenique Juan Sebastián Pereyra

Abstract

We present a theoretical explanation of inefficient early matching in matching markets. Our explanation is based on strategic uncertainty and strategic unraveling. We identify a negative externality imposed on the rest of the market by agents who make early offers. As a consequence, an agent may make an early offer because she is concerned that others are making early offers. Yet other agents make early offers because they are concerned that others worry about early offers; and so on and so forth. The end result is that any given agent is more likely to make an early offer than a late offer.

JEL classification numbers: C72; D78; D82

Key words: Two-sided matching; unraveling; strategic complementarity; assortative matching.

Strategic Uncertainty and Unraveling in Matching Markets *

Federico Echenique Juan Sebastián Pereyra

1 Introduction

We study unraveling in labor markets, and in matching markets in general. Unraveling is a phenomenon by which matches are made too early. They are made at a point in time when there is too little information about the quality of a match. The literature has documented many episodes of unraveling: the market for medical interns is a famous example, in which labor contracts for interns were signed two years before the future interns would graduate (see Roth (1984) or Roth and Sotomayor (1990)). Other examples of unraveling include the market for federal court clerks (Avery, Jolls, Posner, and Roth, 2001; Roth, 2013), for gastroenterology fellows (Niederle and Roth, 2003, 2004), for college football games (Fréchette, Roth, and Ünver, 2007; Roth, 2012), and for placement in sororities (Mongell and Roth, 1991).

We explain unraveling of the timing of offers as the result of *strategic unraveling.* If some agents go early, it becomes more attractive for other agents to go early, which makes it more attractive for even more agents to go early. Our explanation is reminiscent of models of bank runs, where strategic complementarity makes agents undertake an inefficient action because they are concerned that others may take this inefficient action (Diamond and Dybvig, 1983). As we shall see, the matching environment is quite different from models of bank runs, but the basic logic of strategic unraveling is similar.

Strategic unraveling in our model proceeds as follows. There is a loss in efficiency when some agents go early: Information about the quality of the matches arrives late, so it is better for efficiency to wait until the information has arrived to make a match. If some agents go early anyway, this forces later matches to be less efficient. The result is a negative externality that makes it more tempting for all agents to go early. It may push some additional agents over the threshold by which they decide to go early. In turn,

*We are grateful to David Cantala, Serafín Frache, Drew Fudenberg, Andrés Sambarino, Juan Gabriel Brida, Doron Zeilberger, Szilvia Pápai, Renzo Sprugnoli, Christoph Koutschan, Marcelo Lanzilotta, Gastón Cayssials, Damián Gibaja, Pablo Sanchéz Buelna, Benjamín Tello for their comments and suggestions and the seminar participants at the Free University of Bolzano.

these additional agents going early makes it even more tempting to go early—and so on and so forth.

We show that, as a result of such strategic unraveling, *any given agent is more likely to go early than go late.* Our model assumes that there are two periods, and that there is incomplete information over the agents' discount factor. We view the incomplete information simply as modeling device: as a way of generating the strategic uncertainty that allows the logic of unraveling to apply. If an agent goes early, they have no information about the quality of a match. If an agent goes late, then all information has been released, and matching is assortative on the quality of an agent as a partner (highest quality agents match with each other, the second highest match with each other, and so on).

Such assumptions allow us to calculate precisely (or at least to bound) the effects of strategic unraveling. They allow us to measure how far strategic unraveling pushes agents to go early. We can then verify that unraveling goes all the way to making each individual more likely to go early than to go late. There are ways in which our model is rigged against unraveling (it makes late matching particularly attractive, and rules our unraveling purely as the result of coordination failure), yet the model produces early contracting as the modal outcome.[1]

A more precise statement of our results follows. We first assume that only firms are strategic. Workers always accept the offers they receive. In this environment, we show that there is always a full unraveling Bayesian Nash equilibrium, in which all firms make early offers. Further, in *any* symmetric Bayesian Nash equilibrium, a firm makes an early offer with probability at least 3/4.

If we assume that the prior over discount factors is uniform, we can say more. There are exactly two symmetric equilibria when the size of the market is at least 11. One is the full unraveling equilibrium, but it is unstable. In the second equilibrium, which is stable, agents go early with probability larger than 3/4. As the size of the market grows, the probability of going early in the second equilibrium converges to 3/4. If the number of agents is lower than or equal to 10, the unique symmetric Bayesian Nash equilibrium is the full unraveling equilibrium.

In second place, we consider a model where both sides of the market are strategic. Our results continue to apply (there is actually not a substantial conceptual difference between the two models). Among other things, we prove that in any symmetric Bayesian Nash equilibrium, the expected proportion of agents that match early is at least 1/2.

[1]Continuing with the similarity with bank runs, the result is reminiscent of the literature on global games, where basic assumptions on the structure of signals give a precise calculation of how far iterated elimination of dominated strategies will go (Frankel, Morris, and Pauzner, 2003). There is, however, a clear difference with the literature on bank runs. A run can be explained purely by coordination failure. Agents' payoffs in our model are biased against unraveling, and coordination failure alone would not suffice to make agents unravel.

Our results reveal that there may exist an equilibrium pattern of adherence and non-adherence to the hiring dates. The market may become segmented in equilibrium, with one segment hiring early and the other waiting to match in the final period with full information about agents' qualities. This prediction differs from the situation in some settings where an initial level of non-adherence grows and adherence drops over time. In contrast, we demonstrate that a mixed level of adherence can be sustainable in an equilibrium, which is consistent with the empirical evidence (Avery, Jolls, Posner, and Roth, 2001).

1.1 Related Literature

Ours is the first theoretical study that identifies strategic uncertainty as the main force behind the unraveling of matching markets. One empirical investigation of the market for medical interns also attributes unraveling to strategic uncertainty: Wetz, Seelig, Khoueiry, and Weiserbs (2010) write that early contracting is motivated by concerns over losing interns to other programs who operate out of the match. Their explanation, based on agents' observed behavior in the market, is essentially what we have tried to capture formally in the present paper.

The best-known episode of unraveling is the case of the market for hospital interns before 1945 (Roth, 1984; Roth and Sotomayor, 1990; Roth, 2002). There is evidence that unraveling still exists in this market: Wetz, Seelig, Khoueiry, and Weiserbs (2010) study out-of-match residency offers during the year 2007. In the market for interns, some interns are allowed to take outside-the-match offers (for instance, osteopathic medical students and international medical graduates). Wetz, Seelig, Khoueiry, and Weiserbs (2010) find that 15.7% of the total number of postgraduate year-1 positions available in the three primary care and four procedural and/or lifestyle-oriented specialities studied, were offered outside the match. The authors conclude that about one in five positions in nonprocedural, primary care specialties were offered outside the match and, thus, the situation is similar to that which existed before 1952.

One classic explanation of unraveling is the "stability hypothesis," as formulated by Roth (1991) and Kagel and Roth (2000). This hypothesis affirms that unraveling will be prevented if once the relevant information is revealed, a stable matching is implemented through a clearinghouse. The idea is that, in some sense, the market is trying to establish a stable matching. It simply may be doing so in an inefficient manner. Our paper provides some justification for central clearing houses. There is a clear efficiency gain from late contracting in our model, and late contracting equals a stable matching. The agents' strategic behavior prevents the market from reaching this stable matching, and makes the market unravel.

A handful other papers provide theoretical explanations for unraveling. They focus on different mechanisms than the one we have studied here.

Li and Rosen (1998) and Li and Suen (2000) study a model with transfers (a model based on Shapley and Shubik's (1971) assignment game) in which early contracting provides insurance. They show that unraveling may occur among workers who appear to be most promising a priori, before full information is revealed. As we explain in Section 3, our model does not have an insurance motive for early unraveling. Our paper focuses on a different explanation for unraveling.

Damiano, Li, and Suen (2005) present an explanation of unraveling that is based on search and matching. Agents know their qualities, so there is no informational gain from matching late, but an agent may not meet a partner of sufficiently high quality in a given period. If there are costs to searching, then there is unraveling in how willing agents are to accept a partner. In Damiano, Li, and Suen (2005), unraveling is triggered by search costs. In our model, it is triggered by incomplete information.

Du and Livne (2013) consider the role of transfers in unraveling. They show that, in the absence of transfers, and in the limit as the market size grows, a substantial number of agents will contract early. Unraveling in their paper happens because new agents arrive over time, and agents who are in relatively high positions may want to contract early because the new arrivals may be of higher match qualities. In contrast, in a flexible-transfer regime, agents will not unravel.

Niederle, Roth, and Ünver (2009) explain unraveling as the result of an imbalance between demand and supply. Unraveling arises when there is a surplus of applicants, but a shortage of high quality applicants. When a worker does not know if she will be in the long or short side of the market, she may find early offers made by low quality firms attractive. For such firms, early offers is the only way to employ high quality workers.

Hałaburda (2010) proposes that the key to explaining unraveling is the similarity of firms' preferences. Workers' preferences for firms are identical, and known from the start, but firms learn their preferences for workers in the second period. If firms' preferences are similar, then firms tend to prefer the same workers. Thus, worse firms may have better chances to hire their most preferred candidates if they make early offers. So, if firms' preferences are sufficiently similar, it is likely that some firms will go early. In our model, although preferences are identical, this feature does not explain unraveling. An agent may be concerned about being one of the worst agents in the market, but she would still prefer to wait and contract in the second period. Early contracting in our model is inefficient for every agent. As we show below, the strategic uncertainty over how many other hospitals go early is the main mechanism behind incentives for some agents to match early.

2 The model and results

We present a model of one-to-one matching between workers and firms. In our model we adopt the language of the medical interns market, and call the workers doctors, and the

firms hospitals.

Let H and D be two finite and disjoint sets: H is the set of hospitals, and D the set of doctors. Suppose that $|H| = |D| = n$, so we can identify H and D with (copies) of $\{1, \ldots, n\}$.

A *matching* is a function $\mu : H \cup D \to H \cup D$ such that, for all $h \in H$ and $d \in D$,

1. $\mu(h) \in D \cup \{h\}$ and $\mu(d) \in H \cup \{d\}$
2. $d = \mu(h)$ if and only if $h = \mu(d)$.

The meaning of $\mu(h) = h$ is that the position of hospital h remains unfilled, and $\mu(d) = d$ means that doctor d does not find a job.

Each doctor d and hospital h is assigned a *quality*

$$\pi^D(d) \in \{1, \ldots, n\} \text{ and } \pi^H(h) \in \{1, \ldots, n\}.$$

Suppose that π^H and π^D are permutations of $\{1, \ldots, n\}$, so we can think of quality as the rank of a hospital or doctor in the market. The highest-ranked hospital is h such that $\pi^H(h) = n$, for example. If doctor d is hired by hospital h, then they obtain utilities that depend on their qualities, $u_d(\pi^D(d), \pi^H(h))$ is the utility to d and $u_h(\pi^D(d), \pi^H(h))$ is the utility to h. If an agent remains unmatched, then she obtains a utility of zero.

A matching μ is *stable* if there is no pair (h, d) such that

$$u_d(\pi^D(d), \pi^H(h)) > u_d(\pi^D(d), \pi^H(\mu(d))) \text{ and } u_h(\pi^D(d), \pi^H(h)) > u_h(\pi^D(\mu(h)), \pi^H(h)).$$

We assume that u_d and u_h are *multiplicative*; that is: $u_d(i, j) = u_h(i, j) = ij$.
Remark 1. There is a unique stable matching, the matching $\mu(i) = i$ (the identity matching).

2.1 Matching over time: early or late offers

We present a stylized description of matching over time. There are two periods. In the first period, players do not know permutations π^H and π^D, and hospitals can make offers to doctors. When an offer is accepted, the hospital and the doctor exit the job market. In the second period, a pair of permutations π^H and π^D is drawn at random, uniformly and independently. All agents are informed of the draw. In period $t = 1$, hospitals that did not exit the market make offers to the remaining doctors.

We shall focus on the strategic motivations for going early: we study the simultaneous-move game in which hospitals decide, at time $t = 0$ whether to go early and match at time $t = 0$, or to wait and match at time $t = 1$. In particular, we assume that only

hospitals are strategic and that matchings are automatic. In period $t = 1$ the matching is assortative among the agents who have not matched in period $t = 0$. In period $t = 0$, matching is random because no agent has any information on match qualities.

In Section 2.4 we present results where both doctors and hospitals are strategic. Our results essentially go through.[2]

Each agent $i \in H \cup D$ has a discount factor δ_i. The utility at $t = 0$ when h and d match in period t is given by

$$\delta_h^t u_h(\pi^D(d), \pi^H(h)) = \delta_h^t \pi^D(d)\pi^H(h), \text{and}$$
$$\delta_d^t u_d(\pi^D(d), \pi^H(h)) = \delta_d^t \pi^D(d)\pi^H(h),$$

to h and d, respectively.

The following timeline describes how events unfold.

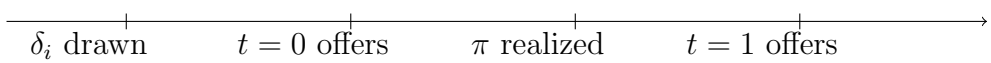

If hospital h makes an offer in period 0 then it matches to a doctor of random quality. Since the hospital does not know its own quality either, when a early offer is accepted, both the hospital and the doctor may be of any quality. The expected utility of making an offer in period 0 is therefore

$$\mathcal{U}_e = \frac{1}{n^2} \sum_{i=1}^{n} \sum_{j=1}^{n} ij.$$

In period 1, the agents have learned the values of π^D and π^H, so the matching will be *assortative*, meaning that the doctor with the highest value of $\pi^D(d)$ will match with the hospital with the highest value of $\pi^H(h)$, the doctor with the next-highest value of $\pi^D(d)$ will match with the hospital with the next-highest value of $\pi^H(h)$, and so on.

If *all other* hospitals wait to make offers in period $t = 1$, then the expected utility to hospital h, in period 0, of waiting for period 1 is

$$\delta_h \frac{1}{n} \sum_{i=1}^{n} i^2.$$

[2]The discussion in Roth (1984) suggests that the model where only hospitals are strategic is the more realistic model. We actually use the results in this section to prove the result in Section 2.4, so to us the model in which only hospitals are strategic is a methodological first step.

In general, if h decides to wait and make an offer in $t = 1$, then some hospitals may have made early offers and left the market with their corresponding doctors. Suppose that m hospitals go early. The matching between the remaining agents will be assortative, but which hospitals match with which doctors depends on the realized qualities of the agents that are left in the market in period 1.

We write $\mathcal{U}_m$ for the expected value of $\pi^H(h)\pi^D(\tilde{\mu}(h))$, where $\tilde{\mu}$ is the (random) assortative matching in period 1 when m hospitals (with their respective doctors) have left the market in period 0. That is, when m hospitals exit the market at $t = 0$, $\mathcal{U}_m$ is the expected utility to a hospital of waiting for $t = 1$. Note that $\pi^H(h)\pi^D(\tilde{\mu}(h))$ depends on the realized qualities of the m hospitals and m doctors that left the market at $t = 0$, and also on the quality to which a hospital may be assigned to. The following is an important technical result in our paper.

Lemma 1.

$$\mathcal{U}_m = \frac{(n+1)^2(2(n-m)+1)}{6(n-m+1)}.$$

Section 4 gives a precise definition of the quantity $\mathcal{U}_m$ and presents a proof of Lemma 1. Note that $\mathcal{U}_0$ is the expected utility of waiting for period 1 if all other hospitals wait to make offers in period $t = 1$, that is: $\mathcal{U}_0 = \frac{1}{n}\sum_{i=1}^{n} i^2$.

2.2 Incomplete information

We are now in a position to define a Bayesian normal-form game that captures the idea that hospitals in this model make early offer due to the strategic uncertainty over how many other hospitals go early.

We assume that $\delta_h \in [0, 1]$ is the private information of hospital h. The *type* of an agent h is therefore δ_h. All agents share the prior that the different δ_h are drawn independently from a distribution over $[0, 1]$ with cumulative distribution function (cdf) F. We assume that $x \leq F(x)$ for all $x \in [0, 1]$: the assumption is satisfied for any distribution with a concave cdf. For example the uniform, or truncated normal, distributions on $[0, 1]$ satisfy our assumption.

A strategy for a hospital h is a function

$$s_h : [0, 1] \to \{0, 1\},$$

where $s_h(\delta_h)$ is the period in which hospital h makes its offer. In our model, there is no decision to be made other than *when* to match.

Given a profile of strategies $s = (s_1, \ldots, s_n)$, we write s_{-h} for the profile of strategies of hospitals other than h. Given a profile s_{-h}, for each realization of δ_{-h}, s_{-h} determines m, the number of hospitals that go early. Thus, s_{-h} defines a probability distribution for m. We write $\mathbf{E}_{s_{-h}}\mathcal{U}_m$ for the expected value of $\mathcal{U}_m$ given s_{-h} (see Lemma 1). Then,

$\delta_h \mathbf{E}_{s_{-h}} \mathcal{U}_m$ is the expected utility at time 0, to hospital h, of waiting for $t = 1$ to make an offer, if all hospitals other than h have the profile of strategies s_{-h}. In particular, note that $\mathbf{E}_{s_{-h}} \mathcal{U}_m = \sum_{i=0}^{n-1} Pr(m = i)\mathcal{U}_i$, where $Pr(m = i)$ is defined by s_{-h} (and is calculated using the cdf F).

Given a profile s_{-h}, a hospital h will decide to go early if and only if

$$\mathcal{U}_e \geq \delta_h \mathbf{E}_{s_{-h}} \mathcal{U}_m \tag{1}$$

(recall that $\mathcal{U}_e$ is the expected utility of making an early offer).

A profile of strategies $s = (s_1, \ldots, s_n)$ is a *Bayesian Nash equilibrium (BNE)* if (1) is satisfied for each $h \in H$. A BNE is *symmetric* if $s_h = s_{h'}$ for all $h, h' \in H$. A BNE is *full unraveling* if $s_h(\delta_h) = 0$ for all $h \in H$.

Theorem 1. *If $n \leq 10$ then the unique symmetric BNE is the full unraveling BNE. If $n > 10$ then there is at least one symmetric BNE, namely the full unraveling BNE, and in any symmetric BNE $s = (s_1, \ldots, s_n)$ for every $h \in H$ we have that*

$$Pr(s_h = 0) \geq F(3/4) \geq 3/4.$$

Theorem 1 says that any hospital, in any symmetric BNE, is more likely to go early than to late. The equilibrium probability of going early is at least 3/4. It is therefore immediate that:

Corollary 1. *In any symmetric BNE, the expected number of hospitals that go early is at least $nF(3/4) \geq n3/4$.*

2.3 Stability of BNE – Uniform F

We make an additional assumption. We suppose that the prior distribution F is the uniform cdf. In this case, we can make more precise statements about the set of BNE in our game. We can also talk about the stability of equilibria.

For large n, in the unique stable equilibrium, the market is segmented. Most of the market (3/4 of all hospitals) go early, while the rest wait and contract late. Thus our results with a uniform F can explain some of the empirical findings where only part of the market unravels.

Theorem 2. *Let F be the uniform cdf. If $n \leq 10$ then the unique symmetric BNE is the full unraveling BNE. If $n > 10$ then there are exactly two symmetric BNE. One is the full unraveling BNE. The second is a BNE $s^n = (s_1^n, \ldots, s_n^n)$ in which for every $h \in H$*

$$Pr(s_h^n = 0) \geq 3/4 = \lim_{n \to \infty} Pr(s_h^n = 0).$$

Remark 2. The proof of Theorem 1 actually follows from Theorem 2. We lay out the details in Section 6.

We discuss a notion of stability of BNE. Stability allows us to select a symmetric BNE in the cases in which there is more than one. It turns out that the full unraveling BNE is stable when $n \leq 10$ and the equilibrium denoted by s^n in Theorem 2 is the unique stable symmetric BNE when $n > 10$.

A strategy s_h satisfying Equation (1) is characterized by a *threshold* $\bar{\delta}_h \in [0,1]$ such that $s_h(\delta_h) = 0$ if $\delta_h \leq \bar{\delta}_h$ and $s_h(\delta_h) = 1$ if $\delta_h > \bar{\delta}_h$.[3] Given identical thresholds $\bar{\delta}_{-h} = \bar{\delta}$ for all hospitals other than h, we can let $\beta^n(\bar{\delta})$ be the threshold for hospital h defined by Equation (1).

A symmetric BNE is then described by a single $\bar{\delta} \in [0,1]$ with the property that

$$\bar{\delta} = \beta^n(\bar{\delta}).$$

The function β^n is the best-response function of our game. The symmetric BNE are the fixed points of β^n. The following figure shows the graph of β^n for $n = 3, 7, 11, 15, 17$.

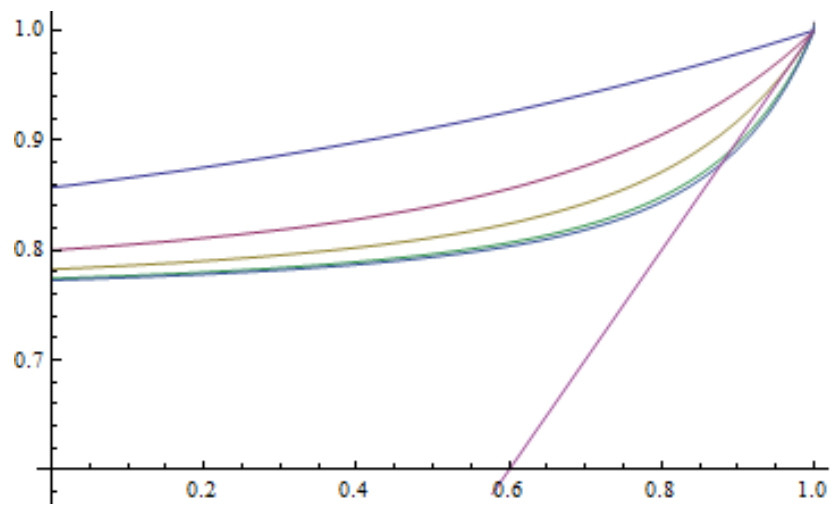

Figure 1: The graph of β^n for $n = 3, 7, 11, 15, 17$.

A symmetric BNE $\bar{\delta}$ is *stable* if there is an open interval I of $\bar{\delta}$ in $[0,1]$ such that for all $\delta \in I$

1. $\delta < \beta^n(\delta)$ when $\delta < \bar{\delta}$, and
2. $\delta > \beta^n(\delta)$ when $\delta > \bar{\delta}$.

A symmetric BNE that is not stable is *unstable*.

It is easy to see from Figure 1 that the full unraveling BNE is stable when it is unique, but for larger n, we have two BNE, and the smaller BNE is stable, while the full unraveling BNE is unstable. This holds more generally:

[3]Specifically, $\bar{\delta}_h = \frac{\mathcal{U}_e}{\mathbf{E}_{s_{-h}}\mathcal{U}_m}$. Then, $\delta_h \leq \bar{\delta}_h$ if and only if $\mathcal{U}_e \geq \delta_h \mathbf{E}_{s_{-h}}\mathcal{U}_m$ if and only if $s_h(\delta_h) = 0$.

Proposition 1. *Let F be the uniform cdf. If $n \leq 10$ then the full unraveling BNE is stable. If $n > 10$ then the symmetric BNE denoted by s^n in Theorem 2 is stable while the full unraveling BNE is unstable.*

2.4 Strategic doctors

We now assume that doctors are strategic as well. We consider the simultaneous-move game in which the players are $H \cup D$. Each agent has to decide whether to match in period $t = 0$ or $t = 1$. So the set of available actions is $\{0, 1\}$ to each player. Agents' strategies are functions $s_i : [0, 1] \to \{0, 1\}$.

When doctors are strategic, the probability that m agents go early is the probability that the *minimum* between the hospitals and the doctors that make offers at period 0, equals m. For any profile of strategies s, and any realization (δ_i) of types, the number of agents who exit the market is the minimum of two quantities, the number of hospitals h with $s_h(\delta_h) = 0$, and the number of doctors d with $s_d(\delta_d) = 0$.

Thus, given a profile of strategies of *all* agents other than h, the expected value of $\mathcal{U}_m$, $\mathbf{E}_{s_{-h}}\mathcal{U}_m$, involves the probability distribution of the minimum of two independent binomial random variables, instead of a single binomial random variable as in the previous case. The number m is drawn according to the minimum of two binomial distributions.

The calculations performed in the proof of Theorem 1 are still sufficient to give us the following result.

Theorem 3. *There is at least one symmetric BNE, namely the full unraveling BNE. In any symmetric BNE $s = (s_i)_{i \in H \cup D}$, for every $i \in H \cup D$ we have that*

$$Pr(s_i = 0) \geq F(1/2) \geq 1/2.$$

Corollary 2. *In any symmetric BNE, the expected number of agents that go early is at least $nF(1/2) \geq n/2$.*

The results in Section 2.3 extend to the case when doctors are strategic. We obtain the following result.

Theorem 4. *Let F be the uniform cdf. If $n > 10$, then there are exactly two symmetric BNE. One is the full unraveling BNE, which is unstable. The second is a stable BNE $s = (s_i)_{i \in H \cup D}$ such that $Pr(s_i = 0) \geq 1/2$ for every $i \in H \cup D$.*

3 A discussion of our model

Our model has a number of specific assumptions that merit some discussion.

First, we assume that payoffs are multiplicative. [4] A parametric assumption about payoffs is unavoidable when we are trying to precisely calculate the probability that an agent will go early (although, as the proof of Lemma 1 attests, the calculation is not simple). The multiplicative assumption also makes sense as a way of abstracting from other possible explanations of unraveling.

We did not want an explanation of unraveling that was based on the insurance value of going early (an avenue explored by Li and Rosen (1998)). We assumed payoffs for which there is a clear advantage to going late, not early. In our model, agents are risk neutral, and even though an agent may end up with a low quality, there is not enough insurance in going early to compensate from the gain in efficiency from a late assortative matching. The multiplicative model implies that, even though an agent may be concerned about a bad draw of their quality, the gains from matching assortatively outweigh the temptation to match to an average partner in $t = 0$.

Roth (1984) suggests that unraveling is the result of a prisoners' dilemma game among the hospitals. The implication is that it is a dominant strategy for the hospitals to go early. Our focus is on the strategic channel, whereby agents go early because of their concerns that others go early (and the consequence negative externality). By our assumptions on preferences, we rule out that it is dominant for agents to go early.

It is still possible to generate unraveling by way of a coordination failure, as in the literature on bank runs (Diamond and Dybvig, 1983). In our model, however, and in contrast to the model of bank runs, such unraveling is unstable. Only when all agents are *certain* that all other agents want to go early, are they willing to go early. It is easy to rule out such an outcome if agents' beliefs may depart from certainty that everyone goes early. In contrast, we show that there is in our model a stable equilibrium in which agents are more likely to go early than to go late. Coordination failure is still present in that equilibrium, but unraveling arises through the channel of strategic unraveling.

Finally, the multiplicative model also captures very nicely the negative externality imposed by agents who go early on the rest of the market. There is an efficiency loss when some agents go early; they hurt the rest of the agents (even in a model without transfers like ours).

The second assumption that deserves mention is our informational assumption. We assume that agents are completely ignorant about match qualities at date $t = 0$. The assumption is extreme, and it is meant to focus the model on the tradeoff between the value of the information revealed at $t = 1$, and the incentives to go early. By assuming that there is no information at time $t = 0$, and full information at $t = 1$, we have biased the model against the unraveling outcome.

That said, it may not be an unrealistic assumption. From Roth and Xing (1994): "offers are being made so early that there are serious difficulties in distinguishing among

[4] This is a common assumption in applied matching theory; see e.g. Bulow and Levin (2006), Damiano, Li, and Suen (2005), and many other papers.

the candidates." So our assumption of complete ignorance over match qualities may reflect the actual situation in the markets where we observe unraveling.

4 Proof of Lemma 1

In this Section we present, in the first place, a formula for $\mathcal{U}_1$ which clarifies the meaning of this important quantity. Then, a algorithm to compute $\mathcal{U}_m$ in the general case is introduced (Proposition 2). Lemmas 2 and 3, deduce a simple formula for $\mathcal{U}_m$.

Recall that $\mathcal{U}_0$ is the expected utility from waiting when all other hospitals wait. Then:

$$\mathcal{U}_0 = \frac{1}{n}\sum_{i=1}^{n} i^2 = \frac{(n+1)(2n+1)}{6}.$$

4.1 Computing $\mathcal{U}_1$

We compute the expected utility from waiting, when only one hospital goes early. In period 1, after permutations π^H and π^D is drawn, sets H and D can be ordered according to agents' quality. Then, consider the sets H and D described as: $H = \{1, 2, \ldots, n\}$ and $D = \{1, 2, \ldots, n\}$.

First, conditional on being of quality i, the leaving hospital is a higher type than i with probability $(n-i)/(n-1)$, and a lower type than i with probability $(i-1)/(n-1)$. This is deduced from the fact that there are $n-1$ possible qualities for the hospital that leaves early, $(n-i)$ of those are higher than i and $(i-1)$ lower than i. The following figure may help to make the computations.

If the leaving hospital is of a higher quality than i, this means that hospital i is better off, unless the doctor that leaves with hospital i is also a "good" doctor: unless the doctor that leaves is one that would be matched in the second period with a hospital better than i. This happens with probability $(n-i)/n$. With the complementary probability, i/n, hospital i is better off by the better hospital leaving. Being better off means that hospital i will be matched in the second period with a doctor with a quality one unit higher than i (i.e., a doctor of quality $(i+1)$), which is worth i to a hospital of type i.

If the leaving hospital is of a lower quality than i, then this does not affect hospital i and it gets i^2; unless the doctor that leaves used to be with a better hospital, or with i, in which case hospital i goes down one step. To a hospital of quality i, losing one step is worth $-i$. So in the event that a hospital of lower type than i leaves (which has probability $(i-1)/(n-1)$) it gets i^2 for sure but it loses $-i$ with probability $(n-i+1)/n$, the probability that the partner of the hospital that goes early is of quality greater than or equal to i.

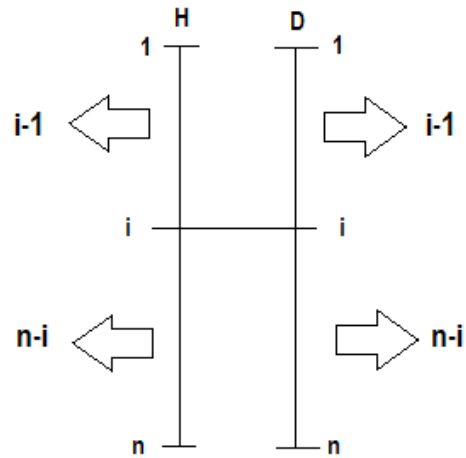

Figure 2: Computing $\mathcal{U}_1$

So:

$$\mathcal{U}_1 = \frac{1}{n}\sum_{i=1}^{n}\left\{\frac{n-i}{n-1}\left[i^2+\frac{i}{n}i\right]+\frac{i-1}{n-1}\left[i^2-\frac{n-i+1}{n}i\right]\right\}.$$

Since the terms that multiply i^2 add to 1, this gives:

$$\mathcal{U}_1 = \frac{1}{n}\sum_{i=1}^{n}\left[i^2+\frac{i}{n(n-1)}\left(n-2i+1\right)\right] = \frac{(2n-1)(n+1)^2}{6n}.$$

Note that $\mathcal{U}_1$ can be also expressed as:

$$\mathcal{U}_1 = \mathcal{U}_0 + \frac{1}{n}\sum_{i=1}^{n}\left[\frac{(n-i)}{(n-1)}\frac{i}{n}i - \frac{(i-1)}{(n-1)}\frac{(n-i+1)}{n}i\right].$$

The intuition behind this equation is the following. Notice that with probability $(n-i)/(n-1)$ the hospital that leaves early is of higher quality than i and with probability $(i-1)/(n-1)$ is of lower quality than i. Then, $((n-i)/(n-1))(i/n)$ is the probability that the hospital that leaves early is of quality higher than i and the doctor it hires is of quality lower than or equal to i. In this event, hospital i increases its utility by i. If the hospital that goes early is of quality lower than i and it hires a doctor of quality higher than or equal to i, which happens with probability $((i-1)/(n-1))((n-i+1)/n)$, then hospital i decreases its utility by i. Therefore, $\mathcal{U}_1$ can be expressed as $\mathcal{U}_0$ plus the "net" expected utility derived from the leaving of a pair of hospital-doctor.

Clearly, this argument is very hard to generalize if we consider more than one hospital that goes early. In the following Section, we develop an algorithm to compute the expected utility from waiting, when m pairs of hospital-doctor leave the market at $t = 0$.

4.2 An algorithm to compute $\mathcal{U}_m$

In this section, we introduce an algorithm to compute the value of $\mathcal{U}_m$ in the general case. First, we define the payoff matrix $\mathbb{U}$ as follows: the element (i, j) of $\mathbb{U}$ is the utility that a doctor of quality i has when she is hired by a hospital of quality j (which is also the utility of the hospital). In particular, the elements of the first column of $\mathbb{U}$ are the utilities that the hospital of quality 1 has if it hires a doctor of quality $1, 2, \ldots, n$. Note that the elements of the main diagonal of $\mathbb{U}$ are: $1, 4, \ldots, i^2, \ldots, n^2$, which are the payoffs that each agent has when no pair of hospital-doctor leaves early. Thus, matrix $\mathbb{U}$ is:

$$\begin{pmatrix} 1 & 2 & 3 & \ldots & (n-1) & n \\ 2 & 4 & 6 & \ldots & 2(n-1) & 2n \\ 3 & 6 & 9 & \ldots & 3(n-1) & 3n \\ . & & & & & \\ . & & & & & \\ . & & & & & \\ (n-1) & 2(n-1) & 3(n-1) & \ldots & (n-1)^2 & n(n-1) \\ n & 2n & 3n & \ldots & n(n-1) & n^2 \end{pmatrix}.$$

When a hospital makes an offer at $t = 0$ and hires a doctor, both the hospital and the doctor may be of any quality. So, to compute the expected utility we have to consider all possible qualities combinations. Assume that the hospital that leaves is of quality j and the doctor that it hires is of quality i. If only this pair of hospital-doctor leaves the market at $t = 0$, in the second period the utilities of hospitals and doctors that do not leave the market are given by the assortative matching. Indeed, the highest quality hospital (between those that remain in the market) will hire the highest quality doctor of those that do not exit the market. The same argument holds for all agents.

Therefore, when doctor i is hired at $t = 0$ by hospital j, the utilities of hospitals and doctors that remain in the market in the second period, are the elements of the main diagonal of the submatrix of $\mathbb{U}$ that it is obtained from deleting the row i and the column j. To consider all possible combinations for the quality of the hospital that leaves early and the doctor that it hires, we have to go over all the elements of $\mathbb{U}$. For each of these cases, there are $n - 1$ possible qualities that a hospital that waits may be assigned to in the second period. Thus, to compute the expected utility from waiting when only one pair of hospital-doctor leaves at $t = 0$, we have to compute all the submatrices of $\mathbb{U}$ obtained by deleting one row and one column, for each one of these submatrices we find its trace, we sum all these traces and, finally, we have to divide the sum by $n^2(n - 1)$, since there are n^2 possible pairs of qualities for the hospital and the doctor that go early.

If m hospitals make an offer at $t = 0$, we generalize the previous argument as follows. Consider all submatrices of $\mathbb{U}$ that result when m rows and m columns are deleted. There are $\binom{n}{m}\binom{n}{m}$ submatrices that can be found. In each case, there are $(n-m)$ possible

qualities for a hospital that waits. Thus, for each submatrix, compute its trace. $\mathcal{U}_m$ is the sum of all the computed traces after dividing it by $\binom{n}{m}\binom{n}{m}(n-m) = \frac{n^2(n-1)^2\ldots(n-m+1)^2}{(m!)^2}(n-m)$.

The following proposition states this result.[5]

Proposition 2. *Let $\mathcal{U}_m$ be expected utility to a hospital of waiting for the second period when m hospitals (with their respective doctors) have left the market at $t = 0$. Denote by $T(n, m)$ the* ***sum*** *of the traces of all submatrices of $\mathbb{U}$ when m rows and m columns are deleted. Then:*

$$\mathcal{U}_m = \frac{T(n,m)(m!)^2}{n^2(n-1)^2\ldots(n-m+1)^2}\frac{1}{(n-m)}.$$

To come up with an expression for $\mathcal{U}_m$, the next step involves the computation of $T(n, m)$. The following lemma finds a formula for $T(n, m)$. Then, we obtain a reduced expression of the formula by means of some combinatorial identities.

Lemma 2. *Denote by $T(n, m)$ the sum of the traces of all submatrices of $\mathbb{U}$ obtained by deleting m rows and m columns. Then:*

$$T(n,m) = \sum_{i=1}^{n}\left[i^2\sum_{k=0}^{m}\left(\binom{i-1}{k}\binom{n-i}{m-k}\right)^2\right] +$$
$$2\sum_{j=1}^{m}\left[\sum_{i=1}^{n-j} i(i+j)\left(\sum_{k=j}^{m}\binom{i+j-1}{k}\binom{n-(i+j)}{m-k}\binom{n-i}{m-k+j}\binom{i-1}{k-j}\right)\right].$$

Proof. First we consider the elements of the main diagonal of $\mathbb{U}$ and second, the remaining elements.

(ii)-elements

Consider an element ii of the matrix and suppose we delete m rows and m columns. Note that there are $i-1$ rows (columns) above (at the left of) the element ii and $n-i$ rows below (at the right). When we delete columns and rows, the element ii remains in the main diagonal if the number of rows that are deleted above ii is equal to the number of columns that are deleted from the left of ii. That is, if we delete k rows above ii and $m-k$ rows below, then we have to delete k columns at the left and $m-k$ columns at the right. Thus, the number of submatrices in which the element ii is in the main diagonal is:

$$\sum_{k=0}^{m}\left(\binom{i-1}{k}\binom{n-i}{m-k}\right)^2.$$

[5]The algorithm can be also applied with other functions u_h and u_d whenever the functions are strictly supermodular on the lattice $\{1, 2, \ldots, n\}^2$.

Since the element ii in the matrix is i^2, the share of $T(n,m)$ that corresponds to the elements of the main diagonal of $\mathbb{U}$ is:

$$\sum_{i=1}^{n}\left[i^2\sum_{k=0}^{m}\left(\binom{i-1}{k}\binom{n-i}{m-k}\right)^2\right].$$

(ij)-elements

Since $\mathbb{U}$ is a symmetric matrix, the trace of the submatrix that we obtain by deleting rows $i_1, i_2, \ldots, i_m$ and columns $j_1, j_2, \ldots, j_m$ is equal to the trace of the submatrix obtained by deleting rows $j_1, j_2, \ldots, j_m$ and columns $i_1, i_2, \ldots, i_m$. Thus, we only have to consider the elements $i(i+j)$ for $j > 0$, and take two times the final result. In particular, when only one row and one column are deleted, the elements that will be in the main diagonal of some submatrix are those of the form $i(i+j)$ for $i = 1, \ldots, n-1$ and $j = 1$. When two rows and two columns are deleted, the elements to be considered in $T(n,m)$ are the previous elements and those of the form $i(i+j)$ for $i = 1, \ldots, n-2$ and $j = 2$. In general, when m rows and m columns are deleted we have to consider all the elements that were contemplated when $m-1$ rows and $m-1$ columns were deleted, and those of the form $i(i+j)$ for $i = 1, \ldots, n-m$ and $j = m$.

As we just noted, when we delete m rows and m columns, the elements that are in the trace of some submatrix are those of the form $i(i+j)$ with $j = 1, 2, \ldots, m$. So, consider an element $i(i+j)$. This element has $i-1$ rows above and $n-i$ below. Moreover, it has $i+j-1$ columns at the left and $n-(i+j)$ columns at the right. Suppose we delete k columns at the left of $i(i+j)$ and $m-(i+j)$ at the right. Now the element is in column $i+j-k$. In order to be in the main diagonal of a submatrix, it should be that: $j-k \leq 0$. Moreover, we have to delete $k-j$ rows above the element $i(i+j)$ to guaranteed that the element is in the main diagonal of the submatrix.

Then, the share of $T(n,m)$ that corresponds to these elements is:

$$2\sum_{j=1}^{m}\left[\sum_{i=1}^{n-j} i(i+j)\left(\sum_{k=j}^{m}\binom{i+j-1}{k}\binom{n-(i+j)}{m-k}\binom{i-1}{k-j}\binom{n-i}{m-(k-j)}\right)\right].$$

□

Lemma 3. *For $n \in \mathbb{N}$ and $m \in 1, 2, \ldots, n-1$ it holds that:*

$$T(n,m) = \binom{n+1}{m}^2\left(\sum_{i=1}^{n-m} i^2\right).$$

The following proof was provided to us by Doron Zeilberger.

Proof. The proof is organized in five claims.

Claim 1: $T(n,m)$ can be written as:

$$\sum_{i,j,k} i(i+j)\binom{i+j-1}{k}\binom{n-(i+j)}{m-k}\binom{n-i}{m-k+j}\binom{i-1}{k-j},$$

where the summation range is over all triples (i,j,k), with the convention that the binomial coefficient $\binom{r}{s}$ is zero if it is not the case that $0 \le s \le r$.

Proof Claim 1

In the proof of the last lemma we found an expression for $T(n,m)$ using the symmetry of the matrix $\mathbb{U}$. If we do not use the symmetry we obtain the following equivalent expression:

$$T(n,m) = \sum_{i=1}^{n}\left[i^2\sum_{k=0}^{m}\left(\binom{i-1}{m-k}\binom{n-i}{k}\right)^2\right] +$$

$$\sum_{j=1}^{m}\left[\sum_{i=1}^{n-j} i(i+j)\left(\sum_{k=j}^{m}\binom{i+j-1}{k}\binom{n-(i+j)}{m-k}\binom{n-i}{m-k+j}\binom{i-1}{k-j}\right)\right] +$$

$$\sum_{i=1}^{m}\left[\sum_{j=1}^{n-i} j(i+j)\left(\sum_{k=i}^{m}\binom{i+j-1}{k}\binom{n-(i+j)}{m-k}\binom{n-j}{m-k+i}\binom{j-1}{k-i}\right)\right].$$

Note that for each $j = 1,\ldots,m$, the range for i is $1 \le i \le n-j$, and for each $i = 1,\ldots,m$, the range for j is $1 \le j \le n-i$. Thus, we can write these conditions as: $1 \le i \le n$, $1 \le j \le n$ and $1 \le i+j \le n$. Now, consider the sum:

$$\sum_{i,j,k} i(i+j)\binom{i+j-1}{k}\binom{n-(i+j)}{m-k}\binom{n-i}{m-k+j}\binom{i-1}{k-j}.$$

The implicit range for each variable is: $j \le k \le m$, $1 \le i \le n$, $1 \le j \le n$ and $1 \le i+j \le n$. This implies that both sums are equal.

Claim 2: The sum of Claim 1 equals:

$$\sum_{a=1}^{n} a \sum_{k=\max(0,a-(n-m))}^{\min(a-1,m)}\binom{a-1}{k}\binom{n-a}{m-k}\sum_{i=a-k}^{a-k+m} i\binom{n-i}{m-k+a-i}\binom{i-1}{k-a+i}.$$

Proof Claim 2

Writing $a = i+j$, (and leaving i as a discrete variable, but letting $j = a-i$), the sum of the last claim is equal to:

$$\sum_{a,k,i} ia\binom{a-1}{k}\binom{n-a}{m-k}\binom{n-i}{m-k+a-i}\binom{i-1}{k-a+i} \quad .$$

Note that summation range of each variable is defined by:

1. For a: $1 \leq a \leq n$.
2. For k: $0 \leq k \leq m$, $0 \leq m-k+a-i \leq n-i$ and $0 \leq k \leq a-1$. This implies that $max(0, a-(n-m)) \leq k \leq min(a-1, m)$.
3. For i: $1 \leq i \leq n$, $0 \leq m-k+a-i$ and $0 \leq k-a+i$. This implies that $a-k \leq i \leq m-k+a$.

Then, the last sum equals the iterated summation:

$$\sum_{a=1}^{n} \sum_{k=\max(0,a-(n-m))}^{\min(a-1,m)} \sum_{i=a-k}^{a-k+m} ia \binom{a-1}{k} \binom{n-a}{m-k} \binom{n-i}{m-k+a-i} \binom{i-1}{k-a+i}.$$

Which is equivalent to:

$$\sum_{a=1}^{n} a \sum_{k=\max(0,a-(n-m))}^{\min(a-1,m)} \binom{a-1}{k} \binom{n-a}{m-k} \sum_{i=a-k}^{a-k+m} i \binom{n-i}{m-k+a-i} \binom{i-1}{k-a+i}.$$

Claim 3: The innermost sum is:

$$\sum_{i=a-k}^{a-k+m} i \binom{n-i}{m-k+a-i} \binom{i-1}{k-a+i} = (a-k) \binom{n+1}{m}.$$

Proof Claim 3

First note that: $i\binom{i-1}{k-a+i} = (a-k)\binom{i}{a-k}$. Then we have:

$$\sum_{i=a-k}^{a-k+m} i \binom{n-i}{m-k+a-i} \binom{i-1}{k-a+i} = (a-k) \sum_{i=a-k}^{a-k+m} \binom{n-i}{m-k+a-i} \binom{i}{a-k}.$$

Now, notice that:

$$\sum_{i=a-k}^{a-k+m} \binom{n-i}{m-k+a-i} \binom{i}{a-k} = \sum_{i=0}^{m} \binom{n-(a-k+i)}{m-i} \binom{a-k+i}{a-k}.$$

Since $\binom{a-k+i}{a-k} = \binom{a-k+i}{i}$, the last sum can be written as:

$$\sum_{i=0}^{m} \binom{n-(a-k+i)}{m-i} \binom{a-k+i}{i}.$$

Which is equal to:

$$\sum_{i=0}^{m} \binom{(n-m-a+k)+m-i}{m-i} \binom{a-k+i}{i}.$$

Finally, we use the Vandermonde-Chu identity (Sprugnoli (Sprugnoli, 2012), page 54):

$$\sum_{k=0}^{n} \binom{x+k}{k} \binom{y+n-k}{n-k} = \binom{x+y+n+1}{n}.$$

Defining $x = a-k$ and $y = (n-m-a+k)$, we have:

$$\sum_{i=0}^{m} \binom{(n-m-a+k)+m-i}{m-i} \binom{a-k+i}{i} = \binom{x+y+n+1}{n} = \binom{n+1}{m}.$$

Claim 4: For the middle sum it holds that:

$$\sum_{k=\max(0,a-(n-m))}^{\min(a-1,m)} (a-k) \binom{a-1}{k} \binom{n-a}{m-k} = a\binom{n-1}{m} - (a-1)\binom{n-2}{m-1}.$$

Proof Claim 4

First, we divide the sum:

$$\sum_{k=\max(0,a-(n-m))}^{\min(a-1,m)} (a-k) \binom{a-1}{k} \binom{n-a}{m-k}$$

$$= a \sum_{k=\max(0,a-(n-m))}^{\min(a-1,m)} \binom{a-1}{k} \binom{n-a}{m-k} - \sum_{k=\max(0,a-(n-m))}^{\min(a-1,m)} k \binom{a-1}{k} \binom{n-a}{m-k}.$$

We use the Vandermonde-Chu identity (Sprugnoli (Sprugnoli, 2012), page 53):

$$\sum_{k=0}^{n} \binom{x}{k} \binom{y}{n-k} = \binom{x+y}{n}.$$

And the first sum is:[6]

$$a \sum_{k=\max(0,a-(n-m))}^{\min(a-1,m)} \binom{a-1}{k} \binom{n-a}{m-k} = a\binom{n-1}{m}.$$

[6]Note that $\max(0, a-(n-m)) = 0$. Indeed, if $(a-(n-m)) > 0$, we have $n-a-m-k < 0$ and thus, $\binom{n-a}{m-k} = 0$. Also, we can write the sum up to $k = m$, because for $k = a, a+1, \ldots, m$, $\binom{a-1}{k} = 0$.

In the second sum if we replace $k\binom{a-1}{k} = (a-1)\binom{a-2}{k-1}$, we have:

$$(a-1)\sum_{k=\max(0,a-(n-m))}^{\min(a-1,m)} \binom{a-2}{k-1}\binom{n-a}{m-k},$$

which is equal to:

$$(a-1)\sum_{k=0}^{m} \binom{a-2}{m-1-k}\binom{n-a}{k}.$$

By the Vandermonde-Chu identity, the sum is:

$$(a-1)\binom{n-2}{m-1}.$$

Claim 5: Finally, we have:

$$T(n,m) = \binom{n+1}{m}^2 \left(\sum_{i=1}^{n-m} i^2\right).$$

Proof Claim 5

Since the last claims we know that:

$$T(n,m) = \binom{n+1}{m}\left(\binom{n-1}{m}\left(\sum_{a=1}^{n} a^2\right) - \binom{n-2}{m-1}\left(\sum_{a=1}^{n} a(a-1)\right)\right).$$

Then, compute:

$$\binom{n+1}{m}\left(\binom{n-1}{m}\left(\sum_{a=1}^{n} a^2\right) - \binom{n-2}{m-1}\left(\sum_{a=1}^{n} a(a-1)\right)\right)$$

$$\begin{aligned}
&= \binom{n+1}{m}\left(\frac{(n-1)!}{m!(n-m-1)!}\frac{n(n+1)(2n+1)}{6}\right.\\
&\left.- \frac{(n-2)!}{(m-1)!(n-m-1)!}\frac{(n-1)n(n+1)}{3}\right)\\
&= \binom{n+1}{m}\left(\frac{(n+1)!}{m!(n-m-1)!}\frac{(2n+1)}{6} - \frac{(n+1)!}{m!(n-m-1)!}\frac{m}{3}\right)\\
&= \binom{n+1}{m}\frac{(n+1)!}{m!(n-m-1)!}\left(\frac{2n+1}{6} - \frac{m}{3}\right)\\
&= \binom{n+1}{m}\frac{(n+1)!}{m!(n-m-1)!}\frac{2n-2m+1}{6}\\
&= \binom{n+1}{m}\frac{(n+1)!}{m!(n-m+1)!}\frac{(n-m)(n-m+1)(2n-2m+1)}{6}
\end{aligned}$$

$$= \binom{n+1}{m}^2 \frac{(n-m)(n-m+1)(2(n-m)+1)}{6}$$
$$= \binom{n+1}{m}^2 \sum_{i=1}^{n-m} i^2 .$$

□

Finally, we obtain the formula for $\mathcal{U}_m$. We know that:

$$\mathcal{U}_m = \frac{T(n,m)}{\binom{n}{m}\binom{n}{m}(n-m)}.$$

First note that:

$$\binom{n+1}{m}^2 = \left[\frac{n+1}{n-m+1}\right]^2 \binom{n}{m}^2.$$

Then, replacing the last expression in $\mathcal{U}_m$, we obtain:

$$\mathcal{U}_m = \frac{(n+1)^2}{(n-m+1)^2(n-m)} \frac{(n-m)(n-m+1)(2(n-m)+1)}{6}.$$

By simplifying the last equation, we prove the result:

$$\mathcal{U}_m = \frac{(n+1)^2(2(n-m)+1)}{6(n-m+1)}.$$

Note that $\mathcal{U}_m$ increases with n, the number of agents. This means that if there are more agents in the market, the incentives to make early offers when a fixed number of agents leave the market at $t = 0$, decreases.

The next result shows that $\mathcal{U}_m$ decreases with m, a property which will be used in the next Section. Then, the expected utility of waiting and match at $t = 1$, decreases as more agents leave early.

Note that $\mathcal{U}_{m+1} - \mathcal{U}_m$ represents the negative externality imposed by one agent who decides to go early, when m agents have already decided to match at $t = 0$. Also, $\mathcal{U}_m - \mathcal{U}_{m+1}$ increases when m becomes larger. Then the negative externality imposed by one more agent going early, increases (in absolute value) as more agents have decided to go early.

Corollary 3. *Let $\mathcal{U}_m$ be expected utility of a hospital that decides to wait for the second period when m pairs of hospital-doctor leave the market at $t = 1$. Then for $n \in \mathbb{N}$ and $m = 0, 1, 2, \ldots, n-1$, we have:*

$$\mathcal{U}_m - \mathcal{U}_{m+1} = \frac{(n+1)^2}{6(n-m)(n-m+1)}.$$

5 Proof of Theorem 2

Recall that the best-response function of our game, β^n, is defined by Equation (1) in the following way. Given identical thresholds $\delta_{-h} = \delta$ for all hospitals other than h, $\beta^n(\delta)$ is given by the equation:

$$\frac{1}{n^2}\sum_{i=1}^{n}\sum_{j=1}^{n} ij = \beta^n(\delta)\mathbf{E}_{s_{-h}}\mathcal{U}_m.$$

Where s_{-h} is such that $s_{\tilde{h}} = 0$ if $\delta_{\tilde{h}} \leq \delta$ and $s_{\tilde{h}} = 1$ if $\delta_{\tilde{h}} > \delta$, for all $\tilde{h} \neq h$.

Note that:

$$\frac{1}{n^2}\sum_{i=1}^{n}\sum_{j=1}^{n} ij = \frac{(n+1)^2}{4}.$$

When all hospitals other than h have the same threshold δ, the probability that m hospitals make early offers is the probability m hospitals have discount factors less than or equal to δ, and $n-m$ hospitals have discount factors higher than δ. Since discount factors are drawn independently from a uniform distribution on $[0, 1]$, the probability that m hospitals leave at $t = 0$ is given by $\delta^m(1-\delta)^{n-1-m}\binom{n-1}{m}$. Therefore:

$$\mathbf{E}_{s_{-h}}\mathcal{U}_m = \sum_{m=0}^{n-1}\delta^m(1-\delta)^{n-1-m}\binom{n-1}{m}\mathcal{U}_m.$$

Then β^n is defined by:

$$\beta^n(\delta) = \frac{(n+1)^2}{4\left[\sum_{m=0}^{n-1}\delta^m(1-\delta)^{n-1-m}\binom{n-1}{m}\mathcal{U}_m\right]}.$$

The symmetric BNE of our game are the fixed points of the best-response function β^n. Since Lemma 1 we know that $\mathcal{U}_{n-1} = \frac{(n+1)^2}{4}$, and then $\beta^n(1) = 1$ for all n. Thus, the full unraveling is a BNE for all n. In this Section we investigate the existence of other fixed points. In particular, Lemma 4 gives a simple formula for β^n. Lemma 6 shows that β^n is an increasing function of δ and $\beta^n(0) > \frac{3}{4}$. Thus, β^n may have, at most, one more fixed point different from $\delta = 1$. Moreover, if it exists, the fixed point is higher

than $\frac{3}{4}$. Lemma 6 proves that $\delta = 1$ is the unique fixed point of β^n for all $n \leq 10$, and if $n > 10$, β^n has exactly two fixed points. Finally, Lemma 8 studies the behavior of β^n when n tends to infinity.

It is worthwhile noting that the threshold at the BNE s^n defined in Theorem 1, decreases as more agents are present in the market. This means that the probability that a hospital makes early offers, decreases as the number of agents increases. The intuition of this result is clear since, as we noted before, the incentives to make early offers when a fixed number of agents leave the market at $t = 0$, decreases with n.

Lemma 4.

$$\beta^n(\delta) = \frac{3}{2}\left(2 - \frac{1}{n(n+1)}\sum_{m=1}^{n} m\delta^{n-m}\right)^{-1}.$$

First we will prove the following lemma which will be useful in the proof of Lemma 4.

Lemma 5. *For any $n \in \mathbb{N}$ and $\delta \in \mathbb{R}$ it holds:*

$$\sum_{m=0}^{n} \frac{(1-\delta)^{n-m}\delta^m \binom{n}{m}}{n-m+2} = \sum_{m=0}^{n} \frac{(m+1)\delta^{n-m}}{(n+1)(n+2)}.$$

Proof. [7] Consider the following polynomials of degree n:

$$p(\delta) = \sum_{m=0}^{n} \frac{(1-\delta)^{n-m}\delta^m \binom{n}{m}}{n-m+2}, \text{ and}$$

$$q(\delta) = \sum_{m=0}^{n} \frac{(m+1)\delta^{n-m}}{(n+1)(n+2)}.$$

We want to prove that $p = q$ and to this end, we will show that all the derivatives of p and q are equal at $\delta = 0$. Denote by $p^{(k)}$ and $q^{(k)}$ the kth derivative of p and q, respectively. It is straightforward to show that:

$$q^{(k)}(\delta) = \sum_{m=0}^{n-k} \frac{1}{(n+1)(n+2)}(m+1)(n-m)(n-m-1)\dots(n-m-k+1)\delta^{n-m-k},$$

for $k = 1, 2, \dots, n$

Then:

$$q^{(k)}(\delta) = \sum_{m=0}^{n-k} \frac{1}{(n+1)(n+2)}(m+1)\frac{(n-m)!}{(n-m-k)!}\delta^{n-m-k}.$$

[7] We are very grateful to Andrés Sambarino for helpful comments on this proof.

When we evaluate at $\delta = 0$, we have:

$$q^{(k)}(0) = \frac{(n-k+1)k!}{(n+1)(n+2)}.$$

To compute the kth derivative of p, consider the functions:

$$g_1(\delta) = (1-\delta)^{n-m}, \text{ and}$$

$$g_2(\delta) = \delta^m.$$

Then:

$$g_1^{(i)}(\delta) = \frac{(n-m)!}{(n-m-i)!}(-1)^i(1-\delta)^{n-m-i}, \text{ and}$$

$$g_2^{(k-i)}(\delta) = \frac{m!}{(m-k+i)!}\delta^{m-(k-i)}.$$

Using the general Leibniz rule we have, for $k = 1, 2, \ldots, n$:

$$(g_1 g_2)^{(k)}(\delta) = \sum_{i=0}^{k} \binom{k}{i} \frac{(n-m)!}{(n-m-i)!} \frac{m!}{(m-k+i)!}(-1)^i(1-\delta)^{n-m-i}\delta^{m-(k-i)}.$$

If $m-k \geq 0, m-(k-i) \geq 0$ for all i and thus, $(g_1 g_2)^{(k)}(0) = 0$ Then, suppose $m-k \leq 0$, we have:

$$(g_1 g_2)^{(k)}(0) = \binom{k}{k-m} \frac{(n-m)!}{(n-k)!} m!(-1)^{k-m}.$$

Thus, the kth derivative of p is:

$$p^{(k)}(0) = \sum_{m=0}^{n} \binom{n}{m} \frac{1}{(n+2-m)} \binom{k}{k-m} \frac{(n-m)!}{(n-k)!}(-1)^{k-m} m! \ .$$

As we just noted, when $m \geq k$, $p^{(k)}(0) = 0$, then, we can write the previous summation from $m = 0$ to $m = k$.

We want to prove that $p^{(k)}(0) = q^{(k)}(0)$ for all $k = 1, 2, \ldots, n$; that is:

$$\sum_{m=0}^{k} \binom{n}{m} \frac{1}{(n+2-m)} \binom{k}{k-m} \frac{(n-m)!}{(n-k)!}(-1)^{k-m} m! = \frac{(n-k+1)!k!}{(n+1)(n+2)}.$$

Note that:

$$\binom{n}{m} \frac{(n+1)(n+2)}{(n+m-2)} = \binom{n+2}{m}(n+1-m), \text{ and}$$

$$\binom{k}{k-m} \frac{(n-m)!}{(n-k)!} m! \frac{1}{(n-k+1)k!}(n+1-m) = \binom{n+1-m}{n-k+1}.$$

Thus, we have to prove that:

$$(-1)^k \sum_{m=0}^{k} \binom{n+2}{m} \binom{n+1-m}{n-k+1} (-1)^m = 1.$$

To finish the proof we use the following binomial identity from (Riordan, 1979, page 8):

$$\sum_{k=0}^{n} (-1)^k \binom{n}{k} \binom{x-k}{r} = \binom{x-n}{r-n} = \binom{x-n}{x-r}.$$

Thus:

$$(-1)^k \sum_{m=0}^{k} \binom{n+2}{m} \binom{n+1-m}{n-k+1} (-1)^m = (-1)^k \binom{-1}{k}.$$

Finally, by the Negation rule we have: $\binom{-1}{k} = (-1)^k \binom{1+k-1}{k} = (-1)^k$, and then:

$$(-1)^k \sum_{m=0}^{k} \binom{n+2}{m} \binom{n+1-m}{n-k+1} (-1)^m = (-1)^{2k} = 1.$$

□

Proof of Lemma 4.

We know that:

$$\beta^n(\delta) = \frac{(n+1)^2}{4\left[\sum_{m=0}^{n-1} (1-\delta)^{n-1-m} \delta^m \binom{n-1}{m} \mathcal{U}_m\right]}, \text{ and}$$

$$\mathcal{U}_m = \frac{(n+1)^2 (2(n-m)+1)}{6(n-m+1)},$$

for $m = 0, \ldots, n-1$.

We will use these two identities:

$$\frac{2(n-m)+1}{n-m+1} = 2 - \frac{1}{n-m+1},$$

$$\sum_{m=0}^{n-1} (1-\delta)^{n-1-m} \delta^m \binom{n-1}{m} = 1.$$

Then, substituting $\mathcal{U}_m$ and using the last identities we have:

$$\beta^n(\delta) = \frac{3}{2\left(2 - \sum_{m=0}^{n-1} \frac{(1-\delta)^{n-1-m} \delta^m \binom{n-1}{m}}{n-m+1}\right)}.$$

By the previous lemma we can write β^n as:

$$\beta^n(\delta) = \frac{3}{2\left(2 - \sum_{m=0}^{n-1} \frac{(m+1)}{n(n+1)} \delta^{n-1-m}\right)}.$$

Which is equivalent to:

$$\beta^n(\delta) = \frac{3}{2\left(2 - \frac{1}{n(n+1)} \sum_{m=1}^{n} m\delta^{n-m}\right)}.$$

The following lemma gives more information on the nature of β^n.

Lemma 6.

$$\beta^n(\delta) = \begin{cases} \dfrac{3}{2\left[2 - \frac{1}{n(n+1)}\left(\frac{\delta^{n+1} - n\delta^2 + (n-1)\delta}{(1-\delta)^2}\right)\right]} & \text{if } \delta \in (0,1) \\ 1 & \text{if } \delta = 1 \end{cases}$$

Further,

1. *β^n is increasing for each n.*
2. *$\beta^n(0) > \frac{3}{4}$ and $\beta^n(1) = 1$, for all n.*
3. *β^n has, at most, two fixed points. $\delta = 1$ is a fixed point of β^n for all $n \in \mathbb{N}$ and it may have another fixed point which is higher than $\frac{3}{4}$.*

Proof. When $\delta = 1$ we have:

$$\beta^n(1) = \frac{3}{2\left(2 - \frac{1}{n(n+1)} \sum_{m=1}^{n} m\right)} = \frac{3}{2\left(2 - \frac{1}{n(n+1)} \frac{n(n+1)}{2}\right)} = 1.$$

Then, suppose $\delta \in (0,1)$, and note that:

$$\sum_{m=1}^{n} m\delta^{n-m} = \delta^n \sum_{m=1}^{n} m\left(\frac{1}{\delta}\right)^m.$$

We use the following identity, that hold for $x \neq 1$:

$$\sum_{m=1}^{n} mx^m = \frac{1 - nx^n + (n-1)x^{n+1}}{(1-x)^2}.$$

Finally, for $\delta \in (0,1)$ we have:

$$\sum_{m=1}^{n} m\delta^{n-m} = \frac{\delta^{n+1} - n\delta^2 + (n-1)\delta}{(1-\delta)^2}.$$

To prove part 1, note that for all $\delta \in [0,1]$:

$$\left(\sum_{m=1}^{n} m\delta^{n-m}\right)' = \sum_{m=1}^{n-1} m(n-m)\delta^{n-m-1} \geq 0.$$

Then, the expression $\sum_{m=1}^{n} m\delta^{n-m}$ increases with δ and thus, β^n is increasing.

For part 2 notice that $\beta^n(0) = \frac{3(n+1)}{2(2n+1)} > \frac{3}{4}$ for all $n \geq 1$.

To prove part 3, we know that $\delta = 1$ is a fixed point of β^n. Since $\beta^n(0) > \frac{3}{4}$, β^n crosses the line $y = x$ at, at most, one more point different from $\delta = 1$. Moreover, since $\beta^n(0) > \frac{3}{4}$ and β^n is increasing, if it exists, the second fixed point is higher than $\frac{3}{4}$.

□

Lemma 7. *Consider the best-response function β^n. Then:*

1. *For each $\delta \in [0,1]$ it holds that $\beta^n(\delta) \geq \beta^{n+1}(\delta)$.*
2. *For all $n \leq 10$, $\delta = 1$ is the unique fixed point of β^n.*
3. *For all $n > 10$, β^n has two and only two fixed points.*

Proof. (1) We will show that:

$$\frac{1}{n(n+1)}\left[\frac{\delta^{n+1} - n\delta^2 + (n-1)\delta}{(1-\delta)^2}\right] \geq \frac{1}{(n+1)(n+2)}\left[\frac{\delta^{n+2} - (n+1)\delta^2 + n\delta}{(1-\delta)^2}\right].$$

Which is equivalent to:

$$\frac{\delta}{n}(\delta^{n-1} - n) + \frac{n-1}{n} \geq \frac{\delta}{n+2}(\delta^n - (n+1)) + \frac{n}{n+2}.$$

Note that:

$$\frac{\delta}{n} > \frac{\delta}{n+2},$$
$$\delta n - 1 - n > \delta^n - (n+1),$$

and:

$$\frac{n-1}{n} = 1 - \frac{1}{n} \geq 1 - \frac{2}{n+2} = \frac{n}{n+2}.$$

Thus, we finish the proof.

(2) and (3). We have to study the solutions in $[0,1]$ of the equation:

$$\beta^n(\delta) = \frac{3}{2\left(2 - \frac{1}{n(n+1)}\sum_{m=1}^{n} m\delta^{n-m}\right)} = \delta.$$

Since for each $\delta \in [0,1]$ it holds that $\beta^n(\delta) \geq \beta^{n+1}(\delta)$, if β^n has two fixed points for some n_0, then β^n has two fixed points for all n such that $n \geq n_0$. We know that $\delta = 1$ is one solution of the equation and there may be, at most, one more solution in $[0,1]$. The equation is equivalent to:

$$p_n(\delta) = \delta^n + \delta^{n-1} + 3\delta^{n-2} + \ldots + (n-1)\delta^2 + (-2n^2 - n)\delta + \frac{3n(n+1)}{2} = 0.$$

As we noted, $\delta = 1$ is a root of p_n. We also know that $p_n(0) = \frac{3n(n+1)}{2} > 0$ and that p_n has, at most, one more root. Then, we will prove that for some n_0, $p'_{n_0}(1) > 0$, which implies that for all $n \geq n_0$, p_n has two fixed points in $[0,1]$. Then, compute:

$$p'_n(1) = \left[\sum_{i=1}^{n-1} i(n-i+1)\right] + (-2n^2 - n) = \frac{n(n+1)(n-10)}{6}.$$

Thus, for all n such that $0 \leq n \leq 10$, $p'_n(1) \leq 0$ and, for all $n > 10$, $p'_n(1) > 0$. This finishes the proof. □

5.1 Behavior as $n \to \infty$

Lemma 8. *For each $\delta \in [0,1]$,*

$$\lim_{n\to\infty} \beta^n(\delta) = \begin{cases} \frac{3}{4} & \text{if } \delta \in [0,1) \\ 1 & \text{if } \delta = 1 \end{cases}$$

Proof. For $\delta = 1$ we know that $\beta^n(1) = 1$ for all n. Assume $\delta < 1$. Then, by Lemma 6, it is enough to show that:

$$\lim_{n\to+\infty} \frac{1}{n(n+1)}\left[\frac{\delta^{n+1} - n\delta^2 + (n-1)\delta^t}{(1-\delta)^2}\right] = 0.$$

The last expression is equivalent to:

$$\frac{\delta}{(1-\delta)^2}\left[\frac{(\delta)^n}{n(n+1)} - \frac{\delta}{(n+1)} + \frac{n-1}{n(n+1)}\right].$$

Finally, it is straightforward to show that the limit of the last expression when n tends to infinity is 0. □

Note that Lemma 8 implies that the best-response function β^n converges to a discontinuous function as $n \to \infty$.

Finally, note that in any symmetric BNE the expected number of hospitals that go early is given by:

$$\sum_{m=0}^{n} m(1-\delta^*)^{n-m}(\delta^*)^m \binom{n}{m}$$

Where δ^* is a fixed point of β^n.

The last expression equals $n\delta^*$. As we noted before, β^n has, at most, two fixed points, both higher than 3/4. Thus, in any symmetric BNE, the expected number of hospitals that go early is at least $(3/4)n$.

6 Proof of Theorem 1

When all agents share the prior that different δ_h are drawn independently from a distribution over $[0,1]$ with cdf F, the best-response function is given by $F(\beta^n(x))$. Since β^n is an increasing function and $F(x) \geq x$, we have that $\beta^n(F(x)) \geq \beta^n(x)$. Finally, note that $F(1) = 1$ and that $\beta^n(1) = 1$. Then Theorem 1 follows directly from Theorem 2.

7 Proof of Theorem 4

In the case where both sides of the market are strategic, the game is analyzed in the same way that we did in the previous sections. The difference is that now the probability that m agents leave early is the probability that the minimum between the hospitals and the doctors that play at $t = 0$, equals m. Then, the expected value of $\mathcal{U}_m$, involves the probability distribution of the minimum of two independent binomial random variables.

We introduce some additional notation. Let x_m be the probability that a binomial random variable with parameters $(\delta, n-1)$ equals m, and let h_m be the probability that the minimum of two independent such random variables equals m. Denote by G the

distribution function of a binomial random variable with parameters $(\delta, n-1)$ and let $\bar{G} = 1 - G$. Therefore, the best-response function is defined by

$$\tilde{\beta}^n(\delta) = \frac{(n+1)^2}{4\Big[\sum_{m=0}^{n-1} h_m \mathcal{U}_m\Big]}.$$

We use the results of the previous sections to find a lower and upper bound for $\tilde{\beta}^n$. It is straightforward to prove that $\frac{1}{2}\beta^n \leq \tilde{\beta}^n \leq \beta^n$. Then, for all $n > 10$, $\tilde{\beta}^n$ has, at least, one fixed point which lies within the interval $(\frac{3}{8}, \frac{3}{4})$. Moreover, as we will prove in the following lemmas, the lower bound can be improved, which allows us to conclude that in the general model, at least one half of the agents will exit the market early.

We first prove some properties of $\tilde{\beta}^n$. In particular, Lemma 9 shows that: $\delta = 1$ is a fixed point of $\tilde{\beta}^n$ for all n, $\tilde{\beta}^n$ is an increasing function of δ, and that $\tilde{\beta}^n(\delta) \geq \tilde{\beta}^{n+1}(\delta)$ for all n. Lemma 10 demonstrates that for each $\epsilon > 0$ there exists n_0 such that for all $n \geq n_0$ it holds:

$$\frac{\frac{3}{4}}{\left(\frac{3}{2} + \epsilon\right)} \leq \tilde{\beta}^n(\delta) \leq \beta^n(\delta).$$

Then, $\lim_{n\to\infty} \tilde{\beta}^n(\delta) \geq \frac{1}{2}$, and since $\tilde{\beta}$ decreases when n increases, we conclude that for all n:

$$\frac{1}{2} \leq \tilde{\beta}^n(\delta) \leq \beta^n(\delta).$$

Lemma 9. *Consider the best-response function $\tilde{\beta}^n$ as defined before. Then:*

1. $\tilde{\beta}^n(1) = 1$ *for all* n.
2. $\tilde{\beta}^n$ *is an increasing function of* δ
3. *For each* $\delta \in [0,1]$, $\tilde{\beta}^n(\delta) \geq \tilde{\beta}^{n+1}(\delta)$, *for all* n.

Proof. (1) Since the distribution function of the minimum of two independent binomial random variables is $1 - (1-G)^2$, we have:

$$\begin{aligned}
h_m &= (1 - (1 - G(m))^2) - (1 - (1 - G(m-1))^2) \\
&= (1 - G(m-1))^2 - (1 - G(m))^2 \\
&= 2(G(m) - G(m-1)) + G(m-1)^2 - G(m)^2 \\
&= 2x_m + (G(m-1) - G(m))(G(m) + G(m-1)) \\
&= x_m(2 - G(m-1) - G(m)) \\
&= x_m(\bar{G}(m-1) + \bar{G}(m)).
\end{aligned}$$

Thus,

$$\tilde{\beta}^n(\delta) = \frac{(n+1)^2}{4\Big[\sum_{m=0}^{n-1}(1-\delta)^{n-1-m}\delta^m\binom{n-1}{n}(\bar{G}(m-1)+\bar{G}(m))\mathcal{U}_m\Big]}.$$

If we compute $\tilde{\beta}^n(1)$ we obtain:

$$\tilde{\beta}^n(1) = \frac{(n+1)^2}{4[(\bar{G}(n-2)+\bar{G}(n-1))\mathcal{U}_{n-1}]}.$$

Since $\mathcal{U}_{n-1} = \frac{(n-1)^2}{4}$, and for $\delta = 1$, $\bar{G}(n-2) = 1$ and $\bar{G}(n-1) = 0$, we have that $\tilde{\beta}^n(1) = 1$.

(2) Now, if $\hat{G}$ is the distribution function of a binomial random variable with parameters $(\hat{\delta}, n-1)$, with $\hat{\delta} > \delta$, we have that $\hat{G}(m) \leq G(m)$ for all $m \in \{0, 1, \ldots, n-1\}$. This implies that $1-(1-\hat{G}(m))^2 \leq 1-(1-G(m))^2$. Let $\hat{h}_m$ be the probability that the minimum of two independent binomial random variables with parameters $(\hat{\delta}, n-1)$ equals m. Then, since $\mathcal{U}_m$ decreases with m, we have that

$$\sum_{m=0}^{n-1}\hat{h}_m\mathcal{U}_m \leq \sum_{m=0}^{n-1}h_m\mathcal{U}_m.$$

Therefore, $\tilde{\beta}^n$ is an increasing function of δ.

(3) We know that $\mathcal{U}_m = \frac{(n+1)^2(2(n-m)+1)}{6(n-m+1)}$. Then, the best-response function can be written as:

$$\tilde{\beta}^n(\delta) = \frac{3}{2\big[1+\sum_{m=0}^{n-1}\frac{n-m}{n-m+1}h_m\big]}.$$

Using a change of variable, $k = n-m$, we obtain:

$$\sum_{m=0}^{n-1}\frac{n-m}{n-m+1}h_m = \sum_{k=1}^{n}\frac{k}{k+1}h_{n-k} = \sum_{k=0}^{n}\frac{k}{k+1}h_{n-k}.$$

Consider two binomial random variables $\tilde{X}_i^n$, $i = 1, 2$. Each random variable i is defined on the same sample space, the space of an infinite number of Bernoulli trials. For $\tilde{X}_i^n$ we count the number of successes in the first n such trials. The sample spaces for $\tilde{X}_1^n$ and $\tilde{X}_2^n$ are independent.

Now, for each n there is also the random variable $\tilde{Y}_i^n$ counting the number of failures. Note that $\tilde{X}_i^n + \tilde{Y}_i^n = n$.

Let r_k be the probability that $\max\{\tilde{Y}_1^n, \tilde{Y}_2^n\} = k$. Observe that $h_{n-k} = r_k$. So we have that:

$$\sum_{m=0}^{n-1} \frac{n-m}{n-m+1} h_m = \sum_{k=0}^{n} \frac{k}{k+1} r_k.$$

Since we have defined these random variables on the same sample space, it is true that

$$\{\tilde{Y}_i^n \geq x\} \subseteq \{\tilde{Y}_i^{n+1} \geq x\}$$

for any x because any time that we have at least x failures in the first n Bernoulli trials, we have at least x failures in the first $n+1$ Bernoulli trials (past failures cannot be undone).

By the same token

$$\{\max\{\tilde{Y}_1^n, \tilde{Y}_2^n\} \geq x\} \subseteq \{\max\{\tilde{Y}_1^{n+1}, \tilde{Y}_2^{n+1}\} \geq x\}.$$

So that the probability distribution (r_k) increases in the sense of first-order stochastic dominance (it actually increases in a stronger sense).

The function $k \mapsto k/(k+1)$ is monotone increasing. Thus the sum

$$\sum_{k=0}^{n} \frac{k}{k+1} r_k$$

is increasing in n, as it is the expected value of a monotone increasing function, and the probability law is monotone increasing in n.

□

Lemma 10. *Let $\epsilon > 0$. Then, there exists n_0 such that for all $n \geq n_0$, the function $\tilde{\beta}^n$ defined previously verifies:*

$$\frac{\frac{3}{4}}{\left(\frac{3}{2} + \epsilon\right)} \leq \tilde{\beta}^n(\delta) \leq \beta^n(\delta).$$

Proof. Since the last Lemma we know that:

$$\begin{aligned} h_m &= x_m(\bar{G}(m-1) + \bar{G}(m)) \\ &\leq 2x_m \bar{G}(m-1). \end{aligned}$$

Then,

$$\sum_{m=0}^{n-1} h_m \mathcal{U}_m = \sum_{m=0}^{n-1} x_m(\bar{G}(m-1) + \bar{G}(m))\mathcal{U}_m \leq \sum_{m=0}^{n-1} 2x_m \bar{G}(m-1)\mathcal{U}_m.$$

The median of a binomial distribution with parameter (n, δ) lies within the interval $[\lfloor n\delta \rfloor, \lceil n\delta \rceil]$. Moreover, if $n\delta$ is an integer, the median is $n\delta$. So, if $n\delta$ is an integer we have that $\bar{G}(n\delta) = Pr[x_m \geq n\delta + 1] \leq \frac{1}{2}$. Otherwise, if $n\delta$ is not an integer, $\bar{G}(\lfloor n\delta \rfloor) = Pr[x_m > \lfloor n\delta \rfloor] = Pr[x_m \geq \lceil n\delta \rceil] \leq \frac{1}{2}$. Thus, if $m \geq \lfloor n\delta \rfloor + 1$, we have that $\bar{G}(m-1) \leq \bar{G}(\lfloor n\delta \rfloor) \leq \frac{1}{2}$. Then,

$$\begin{aligned}
\sum_{m=0}^{n-1} h_m \mathcal{U}_m &\leq 2 \left[\sum_{m=0}^{\lfloor (n-1)\delta \rfloor} \mathcal{U}_m x_m \bar{G}(m-1) + \sum_{m=\lfloor (n-1)\delta \rfloor + 1}^{n-1} \mathcal{U}_m x_m \bar{G}(m-1) \right] \\
&\leq 2 \left[\sum_{m=0}^{\lfloor (n-1)\delta \rfloor} \mathcal{U}_m x_m + \frac{1}{2} \sum_{m=\lfloor (n-1)\delta \rfloor + 1}^{n-1} \mathcal{U}_m x_m \right] \\
&= \sum_{m=0}^{\lfloor (n-1)\delta \rfloor} \mathcal{U}_m x_m + \sum_{m=0}^{n-1} \mathcal{U}_m x_m = g(\delta) + \sum_{m=0}^{\lfloor (n-1)\delta \rfloor} \mathcal{U}_m x_m,
\end{aligned}$$

where $g(\delta) = \sum_{m=0}^{n-1} \mathcal{U}_m x_m$.

Now, recall that

$$\mathcal{U}_m = \frac{(n+1)^2 (2(n-m)+1)}{6(n-m+1)}.$$

So we obtain that:

$$\begin{aligned}
\sum_{m=0}^{\lfloor (n-1)\delta \rfloor} \mathcal{U}_m x_m &= \frac{(n+1)^2}{6} \sum_{m=0}^{\lfloor (n-1)\delta \rfloor} \frac{(2(n-m)+1)}{n-m+1} x_m \\
&= \frac{(n+1)^2}{6} \sum_{m=0}^{\lfloor (n-1)\delta \rfloor} \left(1 + \frac{(n-m)}{n-m+1} \right) x_m \\
&\leq \frac{(n+1)^2}{6} \sum_{m=0}^{\lfloor (n-1)\delta \rfloor} 2x_m \\
&\leq \frac{(n+1)^2}{6}.
\end{aligned}$$

Where, in the last inequality, we use that $G(\lfloor (n-1)\delta \rfloor) \leq \frac{1}{2}$.

Hence,

$$\frac{\sum_{m=0}^{\lfloor (n-1)\delta \rfloor} \mathcal{U}_m x_m}{g(\delta)} \leq \frac{(n+1)^2/6}{g(\delta)} = \left(\sum_{m=0}^{n-1} \frac{2(n-m)+1}{n-m+1} x_m \right)^{-1}. \tag{2}$$

Now, let $\epsilon > 0$. Choose $\rho_0, \rho_1 \in (0,1)$ such that:[8]

$$\frac{1}{1+\rho_0\rho_1} < \frac{1}{2} + \epsilon$$

Let n be large enough such that

$$Pr\left(\tilde{M} \leq n - \frac{\rho_0}{1-\rho_0}\right) \geq \rho_1,$$

where $\tilde{M}$ is a binomial random variable with parameters $(n-1, \delta)$.

Clearly, the value of n that satisfies the last inequality depends on δ. Moreover, for higher values of δ, we need to consider higher values of n. Then, assume that $\delta \leq \frac{1}{2}$, and take n large enough such that the inequality holds. In the last step of the proof, we extend the result of all values of δ.

Now, $m \leq n - \frac{\rho_0}{1-\rho_0}$ iff $\rho_0 \leq (1-\rho_0)(n-m)$ iff

$$\rho_0 \leq \frac{n-m}{n-m+1}.$$

Note that $\sum_{m=0}^{n-1} \frac{2(n-m)+1}{n-m+1} x_m$ is the expectation of the random variable

$$\left(\frac{2(n-\tilde{M})+1}{n-\tilde{M}+1}\right),$$

then we have:

$$\sum_{m=0}^{n-1} \frac{2(n-m)+1}{n-m+1} x_m = \mathbb{E}_{\tilde{M}}\left(\frac{2(n-\tilde{M})+1}{n-\tilde{M}+1}\right) = \mathbb{E}_{\tilde{M}} 1 + \mathbb{E}_{\tilde{M}}\left(\frac{n-\tilde{M}}{n-\tilde{M}+1}\right).$$

Now, note that:

[8] Note that ρ_0 and ρ_1 exist since $j(x) = \frac{1}{1+x}$ is a continuous and decreasing function in $[0,1]$ with $j(0) = 1$ and $j(1) = \frac{1}{2}$.

$$
\begin{aligned}
\mathbb{E}_{\tilde{M}}\left(\frac{n-\tilde{M}}{n-\tilde{M}+1}\right) &= \sum_{m=0}^{n-1}\left(\frac{n-m}{n-m+1}\right)x_m \\
&\geq \sum_{m=0}^{\lfloor n-\frac{\rho_0}{1-\rho_0}\rfloor}\left(\frac{n-m}{n-m+1}\right)x_m \\
&\geq \rho_0 \sum_{m=0}^{\lfloor n-\frac{\rho_0}{1-\rho_0}\rfloor} x_m \\
&= \rho_0 Pr\left(\tilde{M} \leq n-\frac{\rho_0}{1-\rho_0}\right) \\
&\geq \rho_0\rho_1.
\end{aligned}
$$

Thus,

$$
\sum_{m=0}^{n-1}\frac{2(n-m)+1}{n-m+1}x_m \geq 1+\rho_0\rho_1.
$$

Now, using Equation (2) and the definition of ρ_0 and ρ_1 we obtain that

$$
\frac{\sum_{m=0}^{\lfloor (n-1)\delta\rfloor}\mathcal{U}_m x_m}{g(\delta)} \leq \frac{1}{1+\rho_0\rho_1} < \frac{1}{2}+\epsilon.
$$

Then,

$$
\sum_{m=0}^{\lfloor (n-1)\delta\rfloor}\mathcal{U}_m x_m < (\frac{1}{2}+\epsilon)g(\delta),
$$

which implies that:

$$
\sum_{m=0}^{n-1} h_m\mathcal{U}_m \leq \left(\frac{3}{2}+\epsilon\right)g(\delta).
$$

Finally, note that:

$$
\begin{aligned}
\tilde{\beta}^n(\delta) &= \frac{(n+1)^2}{4\left[\sum_{m=0}^{n-1} h_m\mathcal{U}_m\right]} \\
&\geq \frac{(n+1)^2}{4g(\delta)}\frac{1}{\left(\frac{3}{2}+\epsilon\right)} \\
&= \beta^n(\delta)\frac{1}{\left(\frac{3}{2}+\epsilon\right)}.
\end{aligned}
$$

Therefore, there exists n_0 such that for all $n \geq n_0$

$$
\tilde{\beta}^n(\delta) \geq \beta^n(\delta)\frac{1}{\left(\frac{3}{2}+\epsilon\right)} \geq \frac{\frac{3}{4}}{\left(\frac{3}{2}+\epsilon\right)}.
$$

for all $\delta \leq \frac{1}{2}$.

Since $\tilde{\beta}^n$ is an increasing function of δ, if $\delta > \frac{1}{2}$

$$\tilde{\beta}^n(\delta) \geq \tilde{\beta}^n(1/2) \geq \frac{\frac{3}{4}}{\left(\frac{3}{2}+\epsilon\right)}.$$

To prove that $\tilde{\beta}^n(\delta) \leq \beta^n(\delta)$ just note that $1-(1-G(m))^2 \geq G(m)$, and since $\mathcal{U}_m$ is decreasing in m we have

$$\sum_{m=0}^{n-1} \mathcal{U}_m h_m \geq \sum_{m=0}^{n-1} \mathcal{U}_m x_m.$$

Then,

$$\tilde{\beta}^n(\delta) = \frac{(n+1)^2}{4\left[\sum_{m=0}^{n-1} \mathcal{U}_m h_m\right]} \leq \frac{(n+1)^2}{4\left[\sum_{m=0}^{n-1} \mathcal{U}_m x_m\right]} = \beta^n(\delta).$$

Finally, we have that there exists n_0 such that for all $n \geq n_0$

$$\frac{\frac{3}{4}}{\left(\frac{3}{2}+\epsilon\right)} \leq \tilde{\beta}^n(\delta) \leq \beta^n(\delta). \tag{3}$$

□

The lower bond $\left(\frac{3}{2}+\epsilon\right)$ is arbitrarily close to $\frac{3}{2}$. Then, for each δ we have that

$$\lim_{n\to\infty} \tilde{\beta}^n(\delta) \geq \frac{1}{2}.$$

Since by Lemma 9, $\tilde{\beta}^n$ decreases when n increases, we have for all n

$$\frac{1}{2} \leq \tilde{\beta}^n \leq \beta^n.$$

Finally, note that:

1. $\tilde{\beta}^n$ is an increasing function of δ,
2. $\tilde{\beta}^n(1) = 1$,
3. β^n has two fixed points if $n > 10$,
4. $\frac{1}{2} \leq \tilde{\beta}^n \leq \beta^n$,

then, $\tilde{\beta}^n$ has exactly two fixed point: $\delta = 1$ and the other between $\frac{1}{2}$ and $\frac{3}{4}$.

Thus, in the general model, the expected number of agents that go early is at least $(\frac{1}{2})n$.

8 Proof of Theorem 3

Theorem 3 follows from Theorem 4 by observing that $\tilde{\beta}^n(F(\delta)) \geq \tilde{\beta}^n(\delta)$, by the same argument as was used in Section 6.

References

Avery, C., C. Jolls, R. A. Posner, and A. E. Roth (2001): "The market for federal judicial law clerks," *The University of Chicago Law Review*, pp. 793–902.

Bulow, J., and J. Levin (2006): "Matching and Price Competition," *The American Economic Review*, 96(3), pp. 652–668.

Damiano, E., H. Li, and W. Suen (2005): "Unravelling of dynamic sorting," *The Review of Economic Studies*, 72(4), 1057–1076.

Diamond, D. W., and P. H. Dybvig (1983): "Bank runs, deposit insurance, and liquidity," *The Journal of Political Economy*, pp. 401–419.

Du, S., and Y. Livne (2013): "Rigidity of Transfers and Unraveling in Matching Markets," Available at SSRN 2203910.

Frankel, D. M., S. Morris, and A. Pauzner (2003): "Equilibrium selection in global games with strategic complementarities," *Journal of Economic Theory*, 108(1), 1–44.

Fréchette, G. R., A. E. Roth, and M. U. Ünver (2007): "Unraveling yields inefficient matchings: evidence from post-season college football bowls," *The RAND Journal of Economics*, 38(4), 967–982.

Hałaburda, H. (2010): "Unravelling in two-sided matching markets and similarity of preferences," *Games and Economic Behavior*, 69(2), 365–393.

Kagel, J. H., and A. E. Roth (2000): "The dynamics of reorganization in matching markets: A laboratory experiment motivated by a natural experiment," *The Quarterly Journal of Economics*, 115(1), 201–235.

Li, H., and S. Rosen (1998): "Unraveling in matching markets," *American Economic Review*, pp. 371–387.

Li, H., and W. Suen (2000): "Risk sharing, sorting, and early contracting," *Journal of Political Economy*, 108(5), 1058–1091.

Mongell, S., and A. E. Roth (1991): "Sorority rush as a two-sided matching mechanism," *The American Economic Review*, pp. 441–464.

Niederle, M., and A. E. Roth (2003): "Unraveling reduces mobility in a labor market: Gastroenterology with and without a centralized match," *Journal of political Economy*, 111(6), 1342–1352.

——— (2004): "The gastroenterology fellowship match: how it failed and why it could succeed once again," *Gastroenterology*, 127(2), 658–666.

Niederle, M., A. E. Roth, and M. U. Ünver (2009): "Unraveling Results from Comparable Demand and Supply: An Experimental Investigation," Discussion paper, National Bureau of Economic Research.

Riordan, J. (1979): *Combinatorial identities*. RE Krieger Publishing Company Huntington, New York.

Roth, A., and M. Sotomayor (1990): *Two-sided Matching: A Study in Game-Theoretic Modelling and Analysis*, vol. 18 of *Econometric Society Monographs*. Cambridge University Press, Cambridge England.

Roth, A. E. (1984): "Stability and Polarization of Interests in Job Matching," *Econometrica*, 52(1), 47–57.

——— (1991): "A natural experiment in the organization of entry-level labor markets: regional markets for new physicians and surgeons in the United Kingdom," *The American economic review*, pp. 415–440.

——— (2002): "The Economist as Engineer: Game Theory, Experimentation, and Computation as Tools for Design Economics," *Econometrica*, 70(4), pp. 1341–1378.

——— (2012): "Unravelling in college football.," `http://marketdesigner.blogspot.mx/2012/09/unravelling-in-college-football.html` (Accessed 01/06/2013).

——— (2013): "Supreme Court Clerks–some hiring already for 2014," `http://marketdesigner.blogspot.mx/2013/01/supreme-court-clerks-some-hiring.html` (Accessed 01/06/2013).

Roth, A. E., and X. Xing (1994): "Jumping the gun: Imperfections and institutions related to the timing of market transactions," *The American Economic Review*, pp. 992–1044.

Shapley, L., and M. Shubik (1971): "The assignment game I: The core," *International Journal of Game Theory*, 1(1), 111–130.

Sprugnoli, R. (2012): "Riordan Array Proofs of Identities in Gould's Book," `http://www.dsi.unifi.it/~resp/GouldBK.pdf` (Accessed 03/13/2013).

Wetz, R. V., C. B. Seelig, G. Khoueiry, and K. F. Weiserbs (2010): "Out-of-match residency offers: the possible extent and implications of prematching in graduate medical education," *Journal of Graduate Medical Education*, 2(3), 327–333.