Invited Paper

THz Source Requirements for Astrophysics Receivers

T. G. Phillips

California Institute of Technology, Division of Physics,
Mathematics and Astronomy, Pasadena, CA 91125

ABSTRACT

A discussion is given of current and projected needs for local oscillators for submillimeter and terahertz receivers used in astrophysical and astrochemical applications. Arguments are given for frequency range, tuneability, power and noise specifications for local oscillators in various applications. The receivers will generally employ SIS or Schottky diode mixers and these may be used in single elements, receiver arrays or aperture synthesis interferometry, which each have differing requirements. The platforms may be ground-based, probably on high mountain sites, balloons, air or space-based, again each demanding somewhat varying local oscillator capabilities.

1. INTRODUCTION

The submillimeter and terahertz band, which we may define as 1 mm (300 GHz) to 100 μm (3 THz), is one of the few regions of the electromagnetic spectrum yet to be fully available to astronomy. This is in part due to the general difficulties of construction of detectors, receivers and telescopes for these wavelengths and in part to the attenuating nature of the Earth's atmosphere. In the recent past, optical style telescopes were made available, either on high mountain sites, or in the case of the NASA Kuiper Airborne Observatory (KAO), on board a high altitude airplane. These were extremely useful for initial experiments, but lack the necessary angular resolution to allow the field to be fully developed. Now two large telescopes, the James Clerk Maxwell Telescope (JCMT) at 15 m diameter and the Caltech Submillimeter Observatory (CSO) telescope at 10.4m are in operation on Mauna Kea, Hawaii. The KAO is still available for observations which cannot be performed from the ground. In due course NASA plans to construct a 2.5m airborne telescope (SOFIA) and to place in orbit first a 55 cm telescope (SWAS) and later a 2.5 m telescope (SMIM), while ESA plans to launch a 4 m class telescope (FIRST). In all of these cases the detection equipment must be optimized to obtain the best performance.

The submillimeter and terahertz band is a critical one for astronomy. It contains spectral and spatial information on the cosmic background, on very distant newly formed galaxies and on the early stages of star formation within gas clouds in our own galaxy.

The field of study of the physical and chemical properties of the interstellar medium falls into the area of star-formation, since stars are known to be formed within the dense molecular and dust cloud regions of the galaxy and later, release much of their outer envelopes, now heavily processed through nucleosynthesis, back to the interstellar medium. So the atomic and isotopic abundances of the interstellar medium provide information on the nature of the astration process and degree of star-forming activity which a given region has suffered. In addition, a critical factor in the star-formation process itself is the gas cooling mechanism, since a cloud cannot collapse all the way to form a star unless it can rid itself of the heat of its compression under gravity. Such cooling is provided by a variety of molecular transitions in the submillimeter band, but mostly the CO and H_2O molecules and other light hydride species. It also may be provided by atomic species such as neutral and ionized carbon and oxygen. The low lying energy levels and transitions for CO, CI and CII are shown in Fig. 1.

0-8194-1440-9/94/$6.00

On the whole the emission strength is low in the submillimeter for astronomical objects. The electronic processes which provide strong emission in the radio fade away at high frequencies and the thermal emission from cold objects is relatively weak. The combination of weak sources and embryonic detection technology provides a healthy challenge to the submillimeter or terahertz instrument builder.

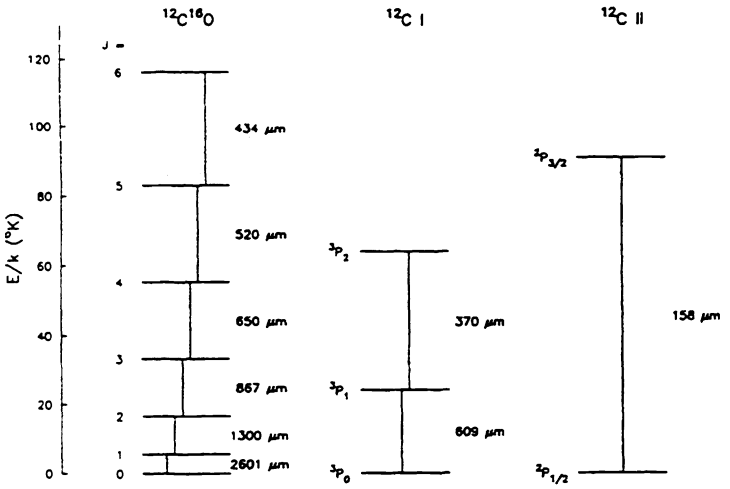

Fig. 1. Low lying transitions for three common interstellar species, CO, CI and CII.

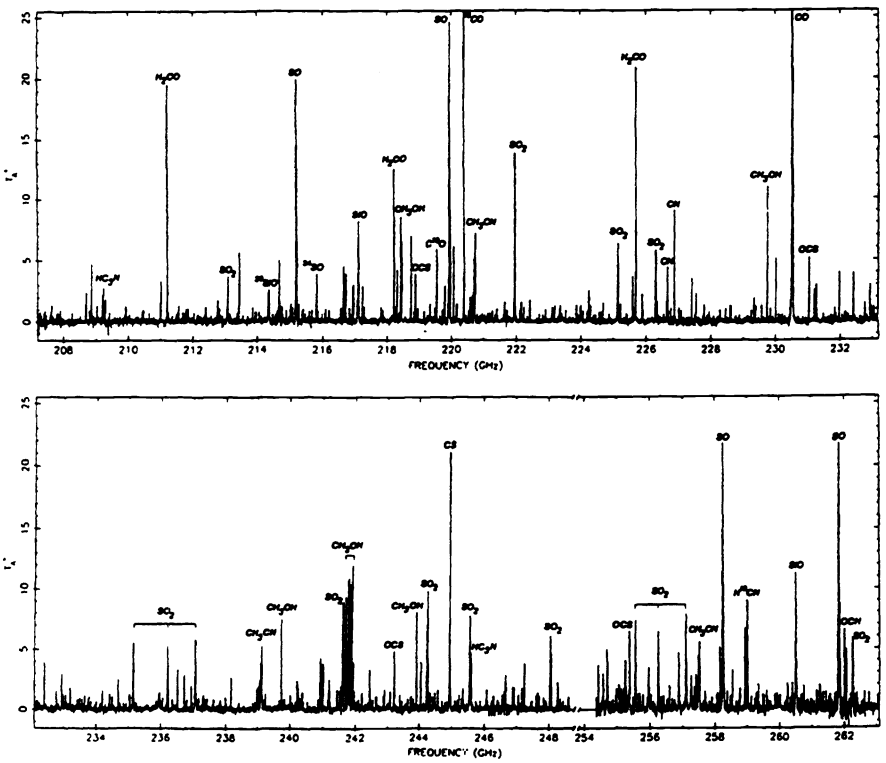

Fig. 2. The spectrum of the Orion Cloud [1] at about 1 mm wavelength, taken using an SIS receiver.

An actual example of part of the millimeter band spectrum of the Orion cloud (OMC-1) is shown in Fig. 2. This was taken with a Caltech telescope using an SIS receiver[1]. The result was the detection of about 900 lines, nearly all of which were identified as various transitions of about 30 molecules, varying in complexity from CO to dimethyl ether (CH_3OCH_3). The spectrum observed was about 60 GHz in width which permitted multiline observations of the molecules, so necessary for secure identification. It is clear that providing a large instantaneous bandwidth is a primary requisite of a millimeter or submillimeter receiver system. Of course, the data of Fig. 2 were obtained with a receiver of only 1 GHz total (both sidebands) sky coverage, so that the displayed spectrum is actually a composite of many individuals scans. The double sideband information was unscrambled to provide a continuous unduplicated spectrum by a deconvolution algorithm technique requiring that each line be observed in both sidebands during the scanning process. Expansion of this spectrum to reveal the full resolution shows a large amount of detailed information available on the motion of the clouds, through the Doppler effect. The actual frequency resolution required in the most demanding cases can be as little as 10 kHz.

Although it is clear from Fig. 2 that there will be a tremendous quantity of astrophysical information contained in the submillimeter band, it has proved hard to obtain, even for our own galaxy, because of the interfering effects of the Earth's atmosphere. From the late 1970s gradually more telescopes have been constructed on Mauna Kea in Hawaii and the KAO has accepted proposals for far-infrared and submillimeter band studies. Even so the atmospheric transmission is not perfect[2,3]. Fig. 3 (upper) shows the optical depth and transmission for good weather (about 1 mm of precipitable water) at the 4,200 m level on Mauna Kea for the submillimeter band. There are three useful regions; the radio/millimeter region from 0 to 300 GHz which is almost completely transparent, apart from a few O_2 and H_2O lines; the two wide submillimeter windows at $\sim$ 650 GHz (450μm) and $\sim$ 850 GHz (350 μm). The rest of the spectrum is blacked out by water lines, apart from some narrow windows near 400 and 500 GHz. The atmosphere is completely opaque at shorter wavelengths until the mid infrared windows at $\sim$ 30 μm are reached. At airborne altitudes, say 12,000 m for the KAO, the transmission is much better, but also not perfect. As can be seen from Fig. 3 (lower), the spectrum between 600 GHz and 3 THz has many strong water lines which could possibly interfere with specific spectral line studies and would certainly contaminate continuum or wide band spectroscopy data.

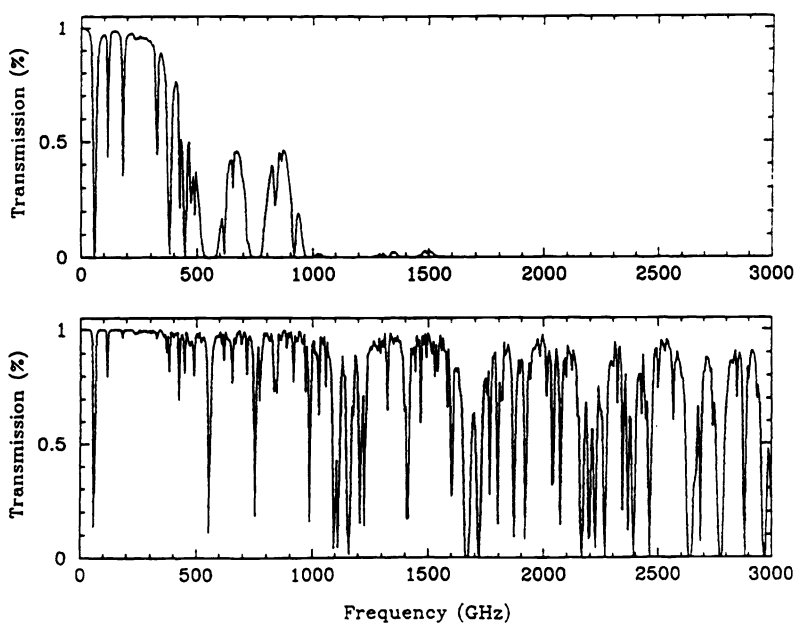

Fig. 3. (Upper) Atmospheric transmission [2,3] from the Caltech Submillimeter Observatory on Mauna Kea, Hawaii, with 1 mm of precipitable water. (Lower) From the Kuiper Airborne Observatory.

2. ASTROPHYSICAL RECEIVERS

2.1 Basic Advantages of Heterodyne Detection

Astrophysical receivers for the submillimeter and terahertz regions have two primary purposes. The first is that they provide very high, essentially unlimited, spectral resolution and so are needed to determine the dynamical behavior and chemical content of the interstellar medium clouds. The spectra in Fig. 2 could not have been obtained by any other techniques. In fact, the resolution required when studying cold interstellar clouds in our galaxy may be down to the level of the thermal velocity of gas at about 10 K, or for a typical molecule, about 0.05 km/sec. At 300 GHz this corresponds to about 50 kHz, so a resolution of 10 kHz would be satisfactory. when comparing with alternative techniques[4] such as bolometers or photodetectors behind cooled high resolution monochromators such as Fabry-Perot etalons, large area gratings or Fourier transform spectrometers, it is found that heterodyne receivers have an advantage when the resolution is high and the frequency is in the radio, millimeter or submillimeter bands. Very roughly, assuming theoretical limits and natural backgrounds, the crossover point is at about 50 MHz resolution width at 1 THz, but it depends in detail on the precise experiment. One simple rule can be demonstrated[4], that for background limited performance for direct and heterodyne detection, both types will have the same capability, with the signal to noise ratio proportional to the square root of the detection bandwidth. Thus for small bandwidths the heterodyne receiver has the advantage of its multichannel frequency performance, whereas the direct detector has the advantage of essentially unlimited large bandwidths. As soon as the bandwidth requirement is a few times less than the IF passband of the heterodyne receiver it is likely to be superior.

The second advantage for the heterodyne receiver is that it allows measurement of phase as well as amplitude of the received wave. This attribute is not actually used in single receiver detection, but is of course critical in aperture synthesis interferometry.

2.2 Receiver Types

There are two common types of mixer receivers currently in use for submillimeter and terahertz astrophysics applications, Schottky diode mixers[5,6] and superconducting tunnel junction (SIS) mixers[7,8]. They have somewhat different ranges of application and local oscillator requirements, so will briefly be described to make the distinction.

Schottky diode receivers make use of the non-linearity in the I-V characteristic provided by the semiconductor (GaAs) band gap, say 0.6V This voltage is much greater than the equivalent voltage of the incident photon field, $h\nu/e \sim 1$ mV at 500 GHz. Therefore the Schottky receivers are classical devices. The performance tends to be limited by the shot noise of the relatively large diode currents and by small series resistances in the structure. In modern usage, the major advantage is that there is no particular upper frequency limit. Modern diodes can be very small area and very low loss[9]. SIS receivers use the superconductor energy gap (2Δ), again to provide non-linear IV characteristics, in superconducting tunnel junctions. Since $2\Delta/e \sim 2.9$ mV for niobium junctions, the material of choice at the moment, the photon energies $\sim 1 - 4$ mV for the submillimeter to 1 THz band, are clearly significant on the scale of the superconducting energy gap and in fact the devices show clear quantum effects[7,8] and the performance is determined by quantum mechanics. The noise performance is in principle limited by quantum noise, as will be described below. The upper frequency limit for the devices is however limited by the superconducting energy gap to $h\nu \leq (2\text{-}4)\Delta$, where the range represents an uncertainty in the present expectations. Currently it is known that Nb devices work well to about 700 GHz[10,11] and it is expected that this can be extended to more than 800 GHz. Since the effective RF impedance of the

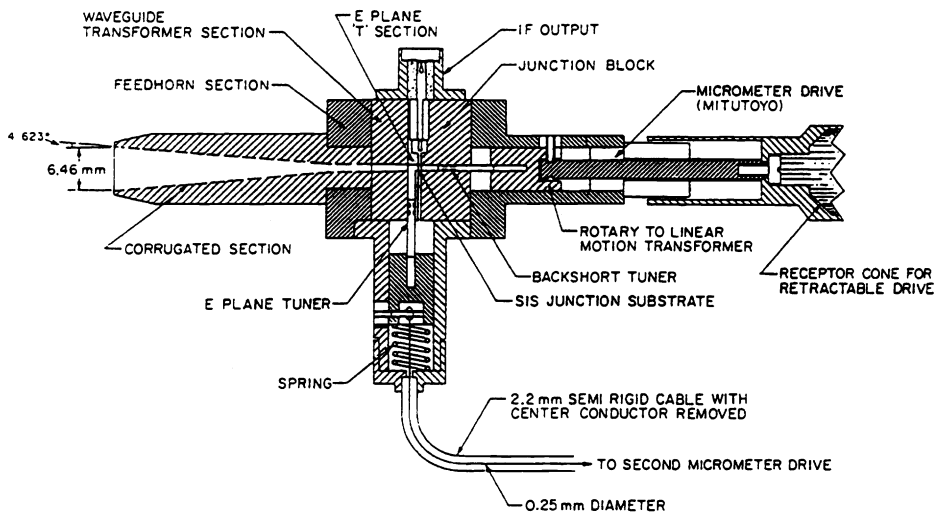

Fig. 4. A 230 GHz two-tuner, rectangular waveguide receiver block designed by Ellison [12] and scaled at the Caltech Submillimeter Observatory to frequencies up to 700 GHz.

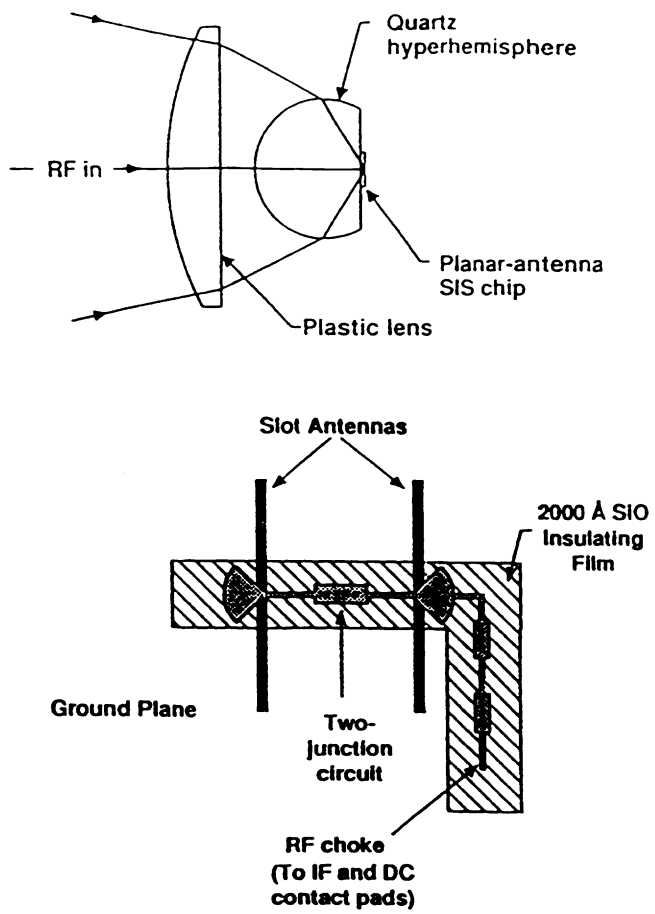

Fig. 5. The optical design and lithographic structure of a twin-slot quasi-optical receiver.[13]

devices is likely to be fixed in the range of 10-50 Ω, the biggest factor controlling the local oscillation power requirement is the operating voltage. SIS devices might be expected to have a much lower power requirement than Schottkies, and this is apparently the case by several orders of magnitude. This point will be discussed further, below.

The diode or tunnel junction can be mounted in various types of matching structure to couple the light from the telescope into the junction area. The particular style doesn't have much impact on the local oscillator requirement, so not much will be said here. The possibilities are waveguides, round or rectangular (probably reduced height), corner cubes and planar antenna, lens coupled. The most popular currently are rectangular waveguide with scalar feeds and probably in the future the new planar antenna types. Figs. 4 and 5 describe examples of these two types.

2.3 Receiver Performances

Receiver performance determines which type of mixer is most useful for a given frequency range and therefore whether the higher local oscillator power requirement of the Schottky receiver is relevant. At the moment niobium junction SIS receivers perform well, within a factor of a few of the theoretical quantum limit, from the radio band to approximately the superconducting energy gap (2Δ), somewhat above 700 GHz. Figs. 6 and 7 show noise temperatures for both waveguide and quasi-optical styles of SIS receivers. Both can achieve noise temperatures of about 3-10 $h\nu/k$ over the entire range, so the choice between them depends on the application. Sometimes single side-band operation can be obtained for the waveguide version, with large IFs and with devices with intrinsically narrow band response. However, this is not possible with either quasi-optical devices or waveguide devices with lithographic on-chip tuning elements, since these are broadband. Future single side-band devices will probably be two detector side-band separation structures. At the moment waveguide structures are used when possible because they have well defined beams due to the use of well characterized scalar feed horns. However, quasi- optical structures are improving in this respect and are certainly the best choice for focal plane array systems (see below).

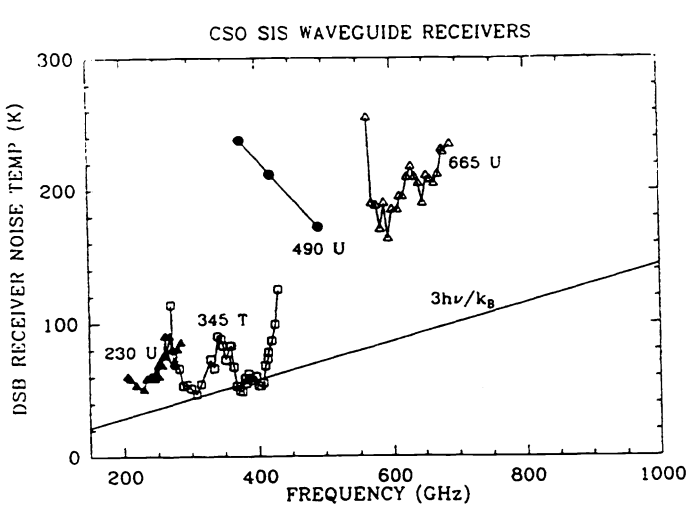

Fig. 6. Noise performance of the Caltech Submillimeter Observatory waveguide SIS receivers.

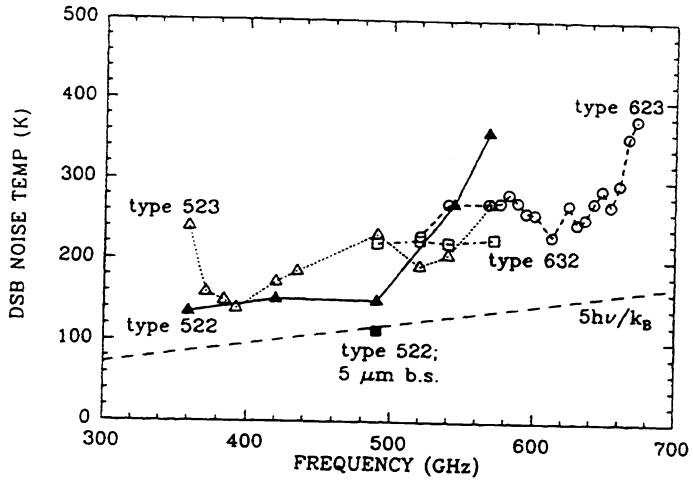

Fig. 7. Noise performance of Caltech SIS quasi-optical receivers.[13]

At frequencies above 700 GHz the current choice is Schottky mixers with corner-cube coupling structures. These are in use up to about 3 THz[6], but with noise temperatures of about 40 $h\nu/k$, rather than 5 $h\nu/k$ for SIS receivers.

2.4 Local Oscillators

The various local oscillator schemes in use for the submillimeter and terahertz bands at the moment include Schottky diode multipliers driven by Gunn oscillators, carcinotrons (backward wave oscillators) and FIR lasers. A typical SIS device requires only about 10^{-8} Watts at the junction (1mV x 10μA), but due to various losses this means about 10^{-7} Watts at the input to the structure. There are two schemes in use for coupling the local oscillator power to the detector structure, designed to allow nearly unimpeded signal thoughput. The simpler is a dielectric beam splitter. Typically this roughly provides 99% efficiency for the signal, with 1% efficiency for the local oscillator injection. However, this then puts up the power requirement to 10^{-5} Watts, actually demanding about 10^{-4} Watts from the output of the local oscillator device, given the losses in horn coupling, lenses etc...Current Gunn/Multiplier devices commercially available can provide 10^{-3} - 10^{-4} Watts up to about 750 GHz with various combinations of doublers, triplers, quadruplers etc., and tuneable Gunn oscillators operating to about 140 GHz, so SIS detectors are currently adequately provided for, except that the multipliers often have multiple tuners and relatively narrow operating bands.

The second injection technique employs some interferometric device, such as a Martin-Puplett scheme, to provide nearly loss-free local oscillator and signal injection, but necessarily separated by a large IF. This extra complexity is necessary if the Gunn/Multiplier scheme is to be used with Schottky receivers, since they require about two orders of magnitude more power than SISs. In fact, for the terahertz regime, FIR lasers are used. Although these are not tuneable, flexibility is achieved by using very wide IF amplifiers and using only the section near the astrophysical frequency of interest. The FIR laser can produce possibly 10 mWatts so is adequate in a power sense.

Carcinotrons produce mWatts of power also and are in principle available to about 1 THz, but they are very expensive, require large, high voltage power supplies and would not be very suitable for space application.

2.5 Focal Plane Arrays

So far there are no receiver arrays operational in the submillimeter or terahertz bands, although there are Schottky diode array receivers in the millimeter band at NRAO and U. Mass. Both these and likely future submillimeter arrays are limited to the order of 10 - 20 detector elements, by both back-end processor and local oscillator power requirements. Roughly speaking, the power requirement is increased by the number of elements, but in practice it will be somewhat worse than that due to the need for uniform illumination of the many elements and the difficulty of coupling. A rough estimate might be that two orders of magnitude more local oscillator power is required. Fig. 8 shows a possible configuration (Fly's Eye) of quasi-optical SIS receivers as a focal plane array. Using a power conserving local oscillator injection scheme (such as interferometric), the power requirement would be about 10^{-4} Watts, but practically speaking it would be better to have 10^{-3} Watts available.

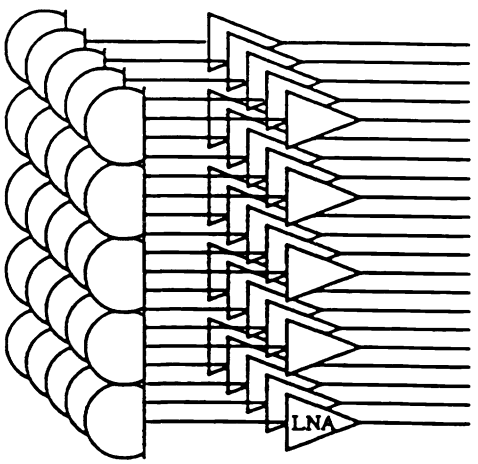

Fig. 8. A possible SIS quasioptical receiver layout in the "Fly's Eye" configuration.

2.6 Aperture Synthesis Interferometers

The submillimeter interferometer currently under construction, by the Smithsonian Astrophysical Observatory, will use SIS receivers. The local oscillator requirements are therefore the same as for any other SIS receiver system, except that very high accuracy of oscillator phase control is needed. Each receiver oscillator must be stable such that the error, or jitter, in the phase is less than about 10° over an integration time of several minutes. This is a much more severe requirement than the 10 kHz frequency width for the single-dish receiver and implies that the oscillator be amendable to phase-lock-loop control techniques, with an intrinsically narrow linewidth.

3. SUMMARY OF LOCAL OSCILLATOR REQUIREMENTS

The areas of concern for performance characteristics are frequency range, tuneability, power and noise, plus of course reasonable cost, efficiency and size.

For the frequency range 300 - 750 GHz, where Nb SIS devices are dominant, a power output of 10 - 100 μWatt is adequate, but 1 mWatt would be preferable to permit easy operation of arrays. For the range 800 GHz - 3 THz, where currently Schottky receivers are used, a power output of 1 mWatt is required. Tuneability by means of voltage or current control is preferable to mechanical control and is

essential for convenient phase-locking, but mechanical control for coarse tuning is acceptable for many cases. Roughly speaking a 10% tuning range is the minimum practical for the typical receiver used in spectroscopy. An octave performance should be the goal. The present devices of choice for the 300 - 750 GHz range are Gunn driven Schottky multipliers with about 100 μWatts - 1 mWatt power and a 10% tuning range. Improvements would have to be in terms of a single device, fewer tuning elements, more power or wider tuning range. For above 800 GHz any solid state device which can meet the mWatt power requirement and is low noise and tuneable is likely to meet with immediate enthusiasm. When SIS receivers begin to operate well in the THz range, local oscillator sources with 10-100 μWatts capability will be satisfactory.

4. REFERENCES

1. G. A. Blake, E. C. Sutton, C. R. Masson and T. G. Phillips, "Molecular abundances in OMC-1: the chemical composition of interstellar molecular clouds and the influence of massive star formation," *Astrophys. J.*, vol. 315, pp. 621-645, 1987.

2. E. Grossman, Airhead Software.

3. W. A. Traub and M. T. Stier, "Theoretical atmospheric transmission in the mid- and far-infrared at four altitudes," *Appl. Optics*, vol. 15, pp. 364-377, 1976.

4. T. G. Phillips, "Techniques of Submillimeter Astronomy," in *Millimeter and Submillimeter Astronomy*, R. D. Wolstencroft and W. B. Burton, Eds., Kluwer, pp. 1-26, 1988.

5. N. R. Erickson, "Low-noise submillimeter receivers using single-diode harmonic mixers," *Proc. IEEE, Terahertz Technology*, vol. 90, pp. 1721-1728, 1992.

6. J. Zmuidzinas, A. L. Betz, and R. T. Boreiko, "A corner-reflector mixer mount for far infrared wavelengths," *Infrared Phys.*, vol. 29 pp. 119-131, 1989.

7. M. J. Wengler, "Submillimeter-wave detection with superconducting tunnel diodes," *Proc. IEEE, Terahertz Technology*, vol. 80, pp. 1810-1826, 1992.

8. R. Blundell and C. -Y. E. Tong, "Submillimeter receivers for radio astronomy," *Proc. IEEE, Terahertz Technology*, vol. 80 pp. 1702-1720, 1992.

9. T. W. Crowe et al. " GaAs Schottky diodes for THz mixing applications," *Proc. IEEE, Terahertz Technology*, vol. 80, pp. 1827-1841, 1992.

10. J. W. Kooi, et al. "A low noise 665 GHz SIS quasi-particle waveguide receiver," *Int. J. IR & MM Waves*, vol. 15, number 3, 1994.

11. G. de Lange et al., "Quantum limited responsivity of a $Nb/Al_2O_3/Nb$ SIS waveguide mixer at 460 GHz and first results at 750 and 840 GHz," *Fourth International Symposium on Space Terahertz Technology*, pp. 41-49, March 1993.

12. B. N. Ellison and R. E. Miller, "A low noise 230 GHz SIS receiver," *Int. J. IR & MM Waves*, vol. 8, pp. 609-626, 1987.

13. J. Zmuidzinas, H. G. LeDuc, J. A. Stern and S. R. Cypher, "Two-junction tuning circuits for submillimeter SIS mixers," *IEEE, Trans. Microwave Theory Tech.*, in press, 1994.