NFIRAOS: TMT narrow field near-infrared facility adaptive optics

Glen Herriot, Paul Hickson, B. L. Ellerbroek, D. A. Andersen, T. Davidge, et al.

Glen Herriot, Paul Hickson, B. L. Ellerbroek, D. A. Andersen, T. Davidge, D. A. Erickson, I. P. Powell, R. Clare, L. Gilles, C. Boyer, M. Smith, L. Saddlemyer, J.-P. Véran, "NFIRAOS: TMT narrow field near-infrared facility adaptive optics," Proc. SPIE 6272, Advances in Adaptive Optics II, 62720Q (27 June 2006); doi: 10.1117/12.672337

Event: SPIE Astronomical Telescopes + Instrumentation, 2006, Orlando, Florida , United States

NFIRAOS: TMT narrow field, near-infrared facility adaptive optics

Glen Herriot[a], Paul Hickson[b], B. L. Ellerbroek[c], D.A. Andersen[a], T. Davidge[a], D. A. Erickson[a], I. P. Powell[a], R. Clare[c], L. Gilles[c] , C. Boyer[c], M. Smith[a], L. Saddlemyer[a], J-P Véran[a],
[a]National Research Council Canada – Herzberg Institute of Astrophysics (Canada)
[b]University of British Columbia (Canada)
[c]Thirty Meter Telescope, 1200 E. California Blvd., Mail Code 102-8, Pasadena, California 91125;

ABSTRACT

Although many of the instruments planned for the TMT (Thirty Meter Telescope) have their own closely-coupled adaptive optics systems, TMT will also have a facility Adaptive Optics (AO) system, NFIRAOS, feeding three instruments on the Nasmyth platform. This Narrow-Field Infrared Adaptive Optics System, employs conventional deformable mirrors with large diameters of about 300 mm. The requirements for NFIRAOS include 1.0-2.5 microns wavelength range, 30 arcsecond diameter science field of view (FOV), excellent sky coverage, and diffraction-limited atmospheric turbulence compensation (specified at 133 nm RMS including residual telescope and science instrument errors.) The reference design for NFIRAOS includes six sodium laser guide stars over a 70 arcsecond FOV, and multiple infrared tip/tilt sensors and a natural guide star focus sensor within instruments. Larger telescopes require greater deformable mirror (DM) stroke. Although initially NFIRAOS will correct a 10 arcsecond science field, it uses two deformable mirrors in series, partly to provide sufficient stroke for atmospheric correction over the 30 m telescope aperture, but mainly to improve sky coverage by sharpening near-IR natural guide stars over a 2 arcminute diameter "technical" field. The planned upgrade to full performance includes replacing the ground-conjugated DM with a higher actuator density, and using a deformable telescope secondary mirror as a "woofer." NFIRAOS feeds three live instruments: a near-Infrared integral field Imaging spectrograph, a near-infrared echelle spectrograph, and after upgrading NFIRAOS to full multi-conjugation, a wide field (30 arcsecond) infrared camera.

Keywords: Adaptive Optics, TMT, Thirty Meter Telescope

1. INTRODUCTION

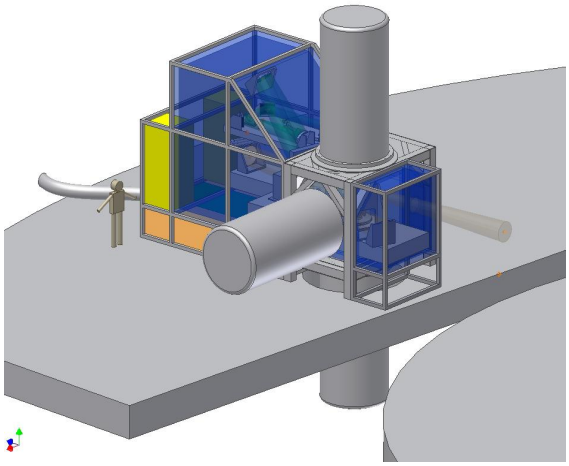

Figure 1 NFIRAOS on Nasymth platform. The primary mirror is on the lower right, with the beam arriving from the telescope shown on the right. The orange and yellow boxes are DM and other electronics, and blue is the optical enclosure. The cylinders are client instruments.

The Thirty Meter Telescope (TMT) project[1] is a public-private partnership whose goal is to construct an extremely large telescope based on over 700 hexagonal-shaped mirror segments that stretch a total of 30 meters in diameter. Such a telescope also needs adaptive optics systems that compensate for natural distortions of the incoming light by Earth's atmosphere, and huge science instruments. NFIRAOS, the first-light AO system for TMT must feed a suite of instruments, work seamlessly with the observatory, and preserve flexibility for the future. NFIRAOS is part of the overall TMT program[2] for adaptive optics managed by Brent Ellerbroek of the TMT project office in Pasadena. The TMT instrument program is managed by David Crampton, NRC-HIA in Victoria[3]. The adaptive optics program includes component development projects and feasibility studies for items like adaptive secondary mirrors, deformable mirrors (DMs), wave-front sensor (WFS) detectors, real time computers, to be supplied by TMT to NFIRAOS. As well, feasibility studies of several specialized AO systems intimately married to specific science instruments are underway.

Advances in Adaptive Optics II, edited by Brent L. Ellerbroek, Domenico Bonaccini Calia,
Proc. of SPIE Vol. 6272, 62720Q, (2006) · 0277-786X/06/$15 · doi: 10.1117/12.672337

The National Research Council Canada's Herzberg Institute of Astrophysics was contracted to conduct a conceptual design study for NFIRAOS, in close collaboration with the TMT project office. The project scientist is Paul Hickson at the University of British Columbia. This concept study ended with a conceptual design review in March 2006. NFIRAOS is planned to stay slightly ahead of instruments' design and development throughout the project. Because it is a key first-light facility of TMT, modeling, error budget, and interfaces are directed from the project office. The conceptual study provided costing estimates for NFIRAOS as input to the overall TMT Cost Review in the 3rd quarter of 2006.

The invited external design review committee generally approved of the NFIRAOS conceptual design described in this paper, but recommended rethinking several concepts:

- The planned upgrade path adds cost and risk and may not be worthwhile for a first light AO system
- Operating an AO system 30 Kelvins below ambient has never been done, and again is costly and risky
- An Acquisition Camera operating at visible wavelengths can cause large time overheads – consider near-IR.
- To avoid vibration from cooling electronics, relocate them away from the optics.

1.1 Summary

While initially NFIRAOS will correct a 10-arcsecond science field with reduced wavefront quality (limited by the actuator density of DMs), the planned NFIRAOS+ Upgrade to full performance includes: replacing the ground-conjugated deformable mirror with a higher actuator density; smaller WFS subapertures; using pulsed lasers; and a deformable telescope secondary mirror as a "woofer", and comes very close to meeting the SRD requirements – mostly limited by the number of DMs. NFIRAOS will ultimately feed three live instruments on top, bottom and lateral ports: initially, it will feed a near-infrared integral field imaging spectrograph and a near-infrared echelle spectrograph; after upgrading, it will also feed a wide field (30 arcseconds) infrared camera. Field rotation will be handled by each science instrument.

We have developed a comprehensive error budget with most terms supported by detailed simulations. We have restricted our trade studies to designs with two DMs, and showed that the optimal number of laser beacons is six. Altitude variations of the sodium layer have been identified as a possible major error source, which reinforces our interest in pulsed lasers. Telescope windshake is also a driver although we have developed a woofer-tweeter control scheme that appears to mitigate the problem under current assumptions.

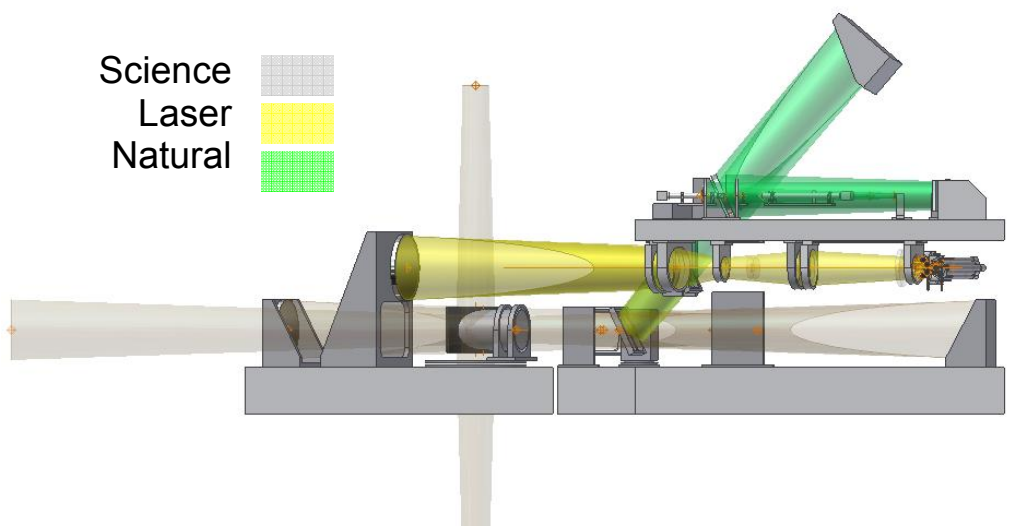

Figure 2 Optics paths within NFIRAOS. The telescope beam enters from the left, and after correction, goes to instruments on vertical ports. A side port is behind the page. The middle tier is the laser wavefront sensors, and the upper green beams are the NGS WFSs and visble Acquisition Camera.

Our complete opto-mechanical design (science path and WFS paths) satisfies the requirements. NFIRAOS will have a Truth WFS to monitor long term drifts in image quality, and will also have a high order NGS WFS for bright source observations without using laser beacons. There will be an acquisition camera and calibration unit in NFIRAOS; a turbulence simulator, and commissioning camera outside it. NFIRAOS will operate at -30 C to meet the background specification. Insulating, cooling, servicing, and turbulence at the entrance window are challenging and identified as risks.

Software and electronics design work demonstrates that the communications load, power consumption and packaging of the control system are tractable. In this study we have assumed that the real time computer, deformable and tip/tilt mirrors and WFS detector CCDs will be supplied by TMT to the NFIRAOS project. We have collaborated on advising the contractors doing design studies for these components.

In summary, our concept for a first light NFIRAOS is practical and worthwhile, and that there is an upgrade path for improved performance over a larger field of view, in line with the overall science requirements for TMT.

2. ARCHITECTURE

NFIRAOS will be the main facility adaptive optics system for TMT, which will provide near diffraction-limited compensation of atmospheric turbulence using laser guide star adaptive optics. It will have opto-mechanical interfaces with three narrow-field (10” - 30”), near-infrared science instruments and reside on the TMT Nasmyth platform. It has software and control interfaces with the Observatory Control (via the AO Sequencer described later), Telescope Control, and data archiving systems. Its adaptive optics control functions will be integrated with the Laser Guide Star Facility (LGSF), the Secondary Mirror Control System, and on-instrument wavefront sensors (OIWFSs) included within science instruments. To maximize sky coverage, these sensors will detect near infrared. Instruments will have two natural guide star tip/tilt sensors, and a single tip/tilt/focus/astigmatism (i.e. 2x2 Shack-Hartmann) wave-front sensor to provide fast guiding, calibrate focus biases in the laser guide star (LGS) WFS induced by variations in the range to the sodium layer, and also detect quadratic modes of focal anisoplanatism. The magnitude limit and integration time for these sensors will be consistent with 50 per cent sky coverage at the galactic pole. Thus, typical operation will use LGS WFSs within NFIRAOS blended with measurements from NGS IR wavefront sensors within instruments. Natural guide star sensing via two tip/tilt sensors and one tip/tilt/focus/astigmatism sensor breaks the degeneracy caused by atmospheric quadratic modes, which are imperfectly sensed by laser guide stars. This uncertainty would cause image distortion, such as magnification errors and differential XY magnification. However, the technique loses some observing efficiency due to acquiring multiple natural stars.

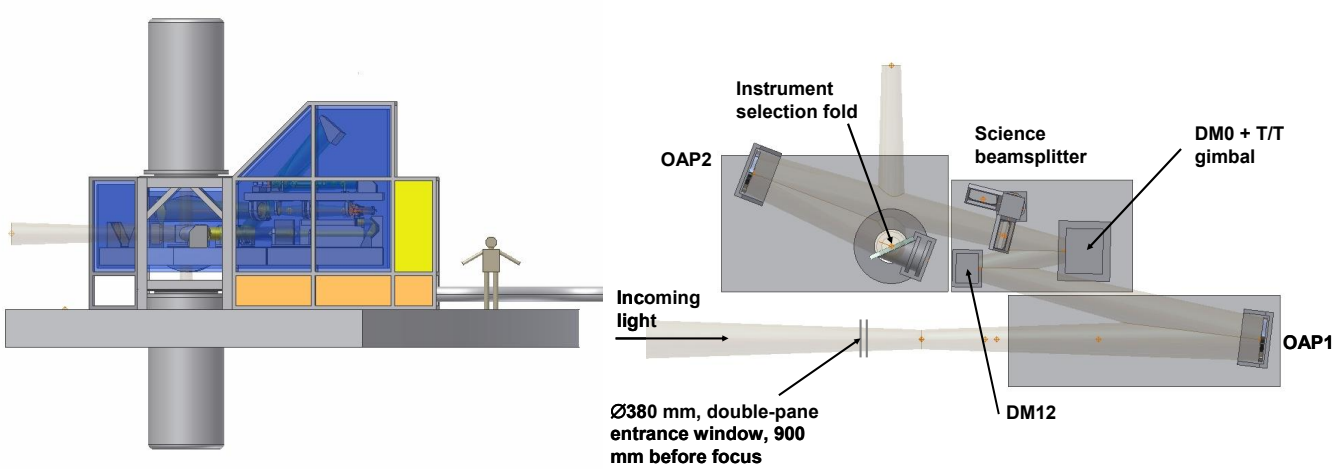

Figure 3 Side view of NFIRAOS (left) and plan view of science path (right)

The current plans are to deliver a baseline NFIRAOS that corrects a 10 arcsecond field for astronomy, but which also moderately corrects a 2-arcminute diameter technical field for this natural guide star wavefront sensing. NFIRAOS will

be also be upgradeable to correct a wider science field (30 arcseconds) for a near-infrared science instrument, planned to be an imager.

NFIRAOS will minimize dependence upon unproven AO component technologies. Thus, it will be operated with currently demonstrated guide star laser pulse formats and piezostack deformable mirrors with actuator stroke and actuator density similar to existing mirrors. As well, NFIRAOS will use NGS and LGS wavefront sensors that are minimal extrapolations from existing detector technology in terms of read noise, pixel read rate, and number of pixels. However, we hope to use a novel radial format CCD for LGS sensing to help mitigate up to 4 arcseconds of spot elongation on outer subapertures. Rectangular subarrays, notionally12x6 pixels, will be placed non-contiguously across the CCD at each lenslet image, with the subarrays' long axes aligned with the elongated laser spot. This geometry minimizes the number of pixels read out, but provides sufficient sampling to permit spot centroiding via correlation tracking or matched filtering, benefiting from structure in the sodium layer.[6]

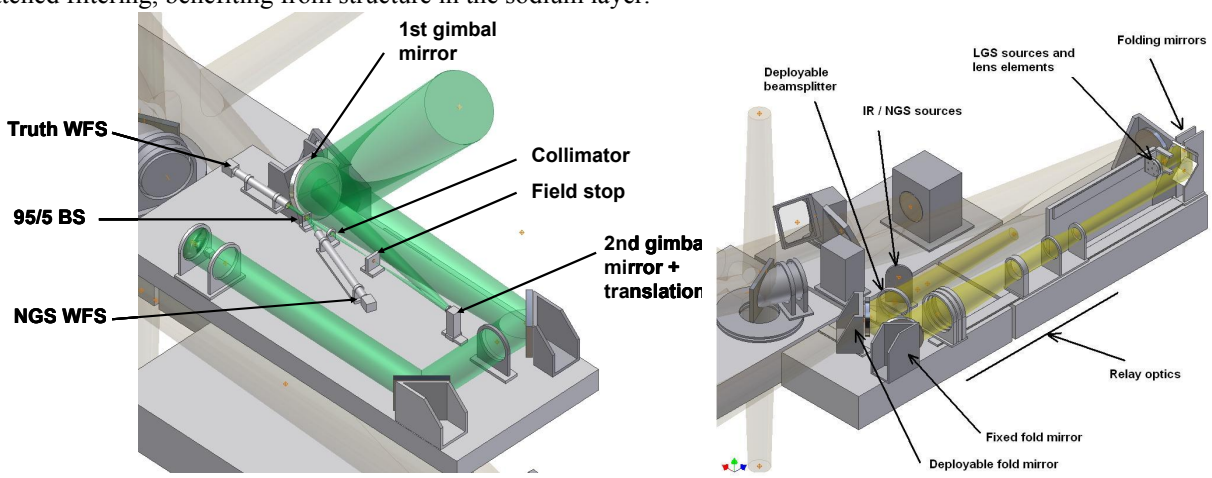

Figure 4 Left panel: Visible NGS WFS and Acquisition Camera. The gimbals select a guide star for the Truth and NGS WFS, or else the first gimbal sends the full 2' field to the acquisition camera at center left. Right panel: the calibration unit injects sources into the science beam – both at infinity and 85-235 km range distance.

The TMT Laser Guide Star Facility (LGSF)[11] that includes the Laser System, the Laser Safety System and the Beam Transfer Optics and Laser Launch Telescope System, can generate up to eight LGS beacons in four different asterisms required by the TMT AO instruments and NFIROAS, the AO facility. For NFIRAOS it will project one beacon on-axis and five beacons in a pentagon of 35" radius. NFIRAOS will use 6 sodium laser guide stars with good beam quality (on the sky) and with a total power of ~100 W initially and ~400 W for the MCAO upgrade. The LGS WFSs will operate with a mean guide star range from 85 to 235 km and NFIRAOS will function at zenith angles from 0 to 65 degrees.

NFIRAOS is required to operate without undue DM saturation or control instabilities with values of r_0 (in the direction of the observation) as small as 0.10 m at $\lambda = 0.5$ μm, and L_0 up to 60 m. Thus TMT will procure deformable mirrors with stroke amplitude six times the rms actuator command necessary for turbulence compensation (5 σ for atmosphere and 1 σ for margin). To reduce background noise from NFIRAOS optics, it will be cooled to -30 C.

NFIRAOS is intended principally for laser guide star operation, to provide 50% sky coverage at the galactic pole with near-diffraction limited performance, specified in the top-level requirements, under nominal seeing of $r_0 = 0.15$ m in the observing direction, to be 120 nm rms high-order wavefront error on-axis, and 133 nm rms over a thirty-arcsecond field of view. This latter field of view and level of image quality is not expected at first light, but after upgrading one deformable mirror. Furthermore it assumes an isoplanatic angle (θ_0) of 2.5 arcseconds, which is an estimate before substantial site survey data has been obtained. Residual jitter is 2 milliarcseconds at first light and with a goal of $\lambda/10D$ ultimately.

For use without lasers, NFIRAOS will include a high-order NGS WFS to control the DMs. This sensor is a copy of an LGS WFS barrel including radial format detector and readout electronics.

NFIRAOS will include remotely deployable simulated NGS and LGS sources. These devices will be used to characterize and calibrate system performance, system alignment, deformable mirror to wavefront sensor influence-functions, WFS detectors, and non-common path aberrations between the wavefront sensing and science optical paths.

1. The calibration unit (CU) is remotely deployable within NFIRAOS, and simultaneously simulates perfect point sources at infinity and LGS sources at 85-235 km; it has extremely good image quality of 26 nm rms. (Figure 4 right) The CU is not a turbulence simulator, and unfortunately, has no suitable planes for phase screens. While a combination calibration unit and turbulence simulator would have been preferable, it was not possible within the current design, and a decision was made to preserve the optimized NFIRAOS layout together with this internal calibration unit, whose sources must be remotely deployable.

2. The turbulator will be manually installed in front of NFIRAOS and has the much more demanding job of combining the sources before putting them through screens conjugate to specific altitudes. The concept is to start out with optics similar to the calibration unit, but then follow it with a relay/telescope simulator creating two conjugate planes for rotating phase screens, e.g. at ranges of 0.7 and 9.6 km.

3. Design studies are underway for a deployable set of simulated NGS and LGS point sources at the telescope prime focus to illuminate the secondary mirror and feed instruments, including NFIRAOS.

4. For integration and testing of NFIRAOS, both in the lab and on the sky, there will be a commissioning camera, with three IR-sensitive NGS WFSs, a small instantaneous field patrolling IR imager, and a high-order low-speed visible light Truth WFS, available to be attached to one of the three NFIRAOS output ports. This will probably reside on the bottom port, which is intended for a second generation instrument.

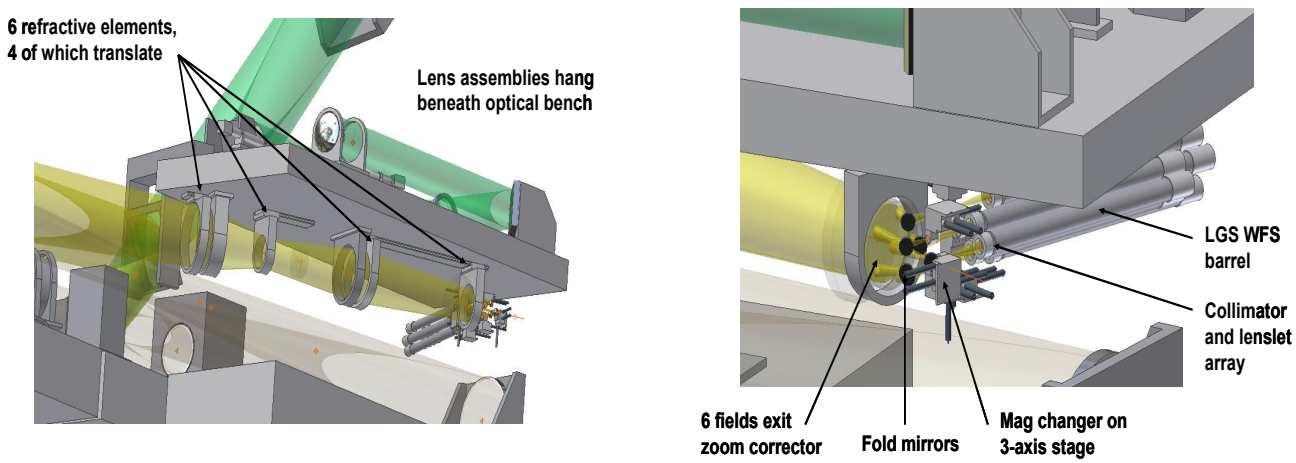

Figure 5 Laser WFS optics. After refocussing by a dedicated copy of OAP2, all five beacons pass through zoom optics before taking separate paths through magnification changers, collimators and WFS barrels.

2.1 Upgrade Path

Recall that even the baseline 10" field of view NFIRAOS operates as a modest MCAO system to improve sky coverage. During this phase, it is expected that the TMT secondary mirror will be a rigid body with little tip/tilt bandwidth. The baseline NFIRAOS will have the following two DMs:

1. A ground-conjugated DM with 60 actuator pitches across the 300-mm pupil. These actuators will have a stroke of at least 9 μm. This mirror will be mounted on a tip/tilt platform with a 20 Hz tip/tilt bandwidth (and a goal of 40 Hz.) This specification is for the tip/tilt platform while tilting the DM, not the overall closed loop bandwidth of the control system.
2. A DM conjugate to 12 km, with 72 actuator spacings across the 360-mm beamprint of the 2-arcminute technical (NGS WFS) field of view.

The upgrade to a 30" field corrected by multi-conjugate adaptive optics is planned as follows:

1. Remove the ground-conjugated DM from the tip/tilt platform.
2. Install a new ground-conjugated DM with <3 μm stroke and 120 actuators across the pupil.
3. Upgrade the LGS WFS cameras to 120 subapertures across the pupil.
4. Replace the telescope secondary mirror with an adaptive secondary to act as a "woofer" for the new DM.
5. Triple the laser power and upgrade it to pulsed format.

3. OPTOMECHANICS

NFIRAOS accepts the telescope beam, corrects it and passes it to three identical instrument mounting ports – two with vertical axes and one horizontal. The input beam from the telescope is 2 m above the Nasmyth platform, and focuses 5 m beyond the edge of the primary mirror. The output f/15 beam from NFIRAOS comes to a focus 750 mm beyond the instrument mounting faces. However, instrument snouts may intrude into NFIRAOS, providing 1 m back focal distance in every case. NFIRAOS includes an input window with a light tight shutter, and an airtight seal for each science instrument's input window.

NFIRAOS provides a mounting face for instrument rotator bearings on the top and bottom ports. The side port, notionally earmarked for WIRC, the 30' imaging camera, is 2 m above the platform. Image de-rotation will be done within the side-facing narrow-field instrument by either a "K" mirror assembly, or by rotating the instrument about a horizontal axis.

Very preliminary estimates of masses are as follows: NFIRAOS 17 T, WIRC 10 T, IRIS 4 T, and NIRES 8 tonnes. NFIRAOS itself has dimensions L x W x H of 9.2 x 3.8 x 5.5 meters, but if the electronics are relocated, the optics enclosure's length will decrease, and additional floor space will be needed for the cooled and insulated electronics racks.

The science wavelength range is 1.0-2.5 μm, with a goal of 0.6-2.5 μm. The optical throughput over this wavelength range should exceed 80%. The "Baseline" output science field of view is a 10 arcsecond square. The output science field will be corrected over a 30 arcsecond square for the NFIRAOS+. The technical field of view, for 1.0-2.5 μm natural guide star sensing, delivered to instruments is 2' diameter.

The optical design images the TMT primary mirror at the ground-conjugate NFIRAOS deformable mirror. The design incorporates a high-order ground-conjugated 60x60 piezostack DM, in series with a 73x73 DM conjugate to h = 12 km. The smaller DM is mounted on a tip/tilt platform (Figure 6). The on-axis beam diameter is 0.30 m at both mirrors so that they may be in single optical relay.

Figure 3 shows the science optical path. Light from the telescope is collimated by an off-axis parabola, reflects off the high altitude, and then ground conjugated DMs, passing through a beamsplitter before being reimaged by a matching OAP. Finally a steering mirror diverts the corrected light to one of three instrument ports.

Figure 5 shows the laser guide star optics. A short-wave reflecting beamsplitter sends the laser light off a fold and then to a replica of the off-axis parabola OAP2. A zoom collimator refocuses the sodium layer while compensating for aberrations due to the finite and varying range distance. Then each laser beacon is diverted into its own stationary LGS camera with collimator, lenslet array and CCD.

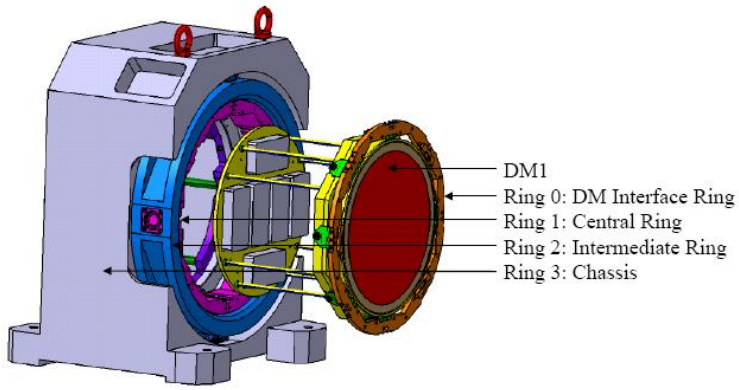

Figure 6 DM mounting onto a tip/tilt stage (from CILAS conceptual design and feasibility study)

4. BACKGROUND AND REFRIGERATION

The overall TMT science requirements demand that NFIRAOS' inter-OH background in K band not exceed 15% of the background due to the sky and the 3-mirror telescope at a nominal temperature of 273 K. The intent is that a real NFIRAOS will only increase integration time on the sky by 15%. With 5 mirrors, a beamsplitter, and a double-pane entrance window, NFIRAOS' emissivity is 15%. To meet the background specification requires cooling of all optical surfaces to -30 Celsius. The jagged upper curve in the left panel of Figure 7 shows the background requirement, calculated by adding a grey-body emission, representing the telescope, to K-band sky background data courtesy of the Gemini Observatory. Fifteen per cent of this total at each wavelength in K band is the not-to-exceed specification for NFIRAOS. The lower smooth curve on the left is the emission from NFIRAOS, for the temperature where this background just kisses the specification curve, (circled). The right hand panel shows how the required temperature would vary versus NFIRAOS emissivity.

Clearly, this temperature range, together with the mass and volume of NFIRAOS will make both servicing it and changing instruments challenging. Humidity from personnel will condense on critical surfaces, yet warming it above this elevated dew point will result in very long cycle times. Heat leakage, around instrument mounting faces and the entrance window, presents high risks. This risk is especially high for uncorrectable self-induced turbulence near the window, which is ~0.9 m in front of focus – the science light has a small footprint of ~5 centimeters, but the laser beams are forty times larger. Convection within and around the double-paned window will cause high spatial and temporal frequency non-common path turbulence, affecting the LGS WFSs path differently from the science path.

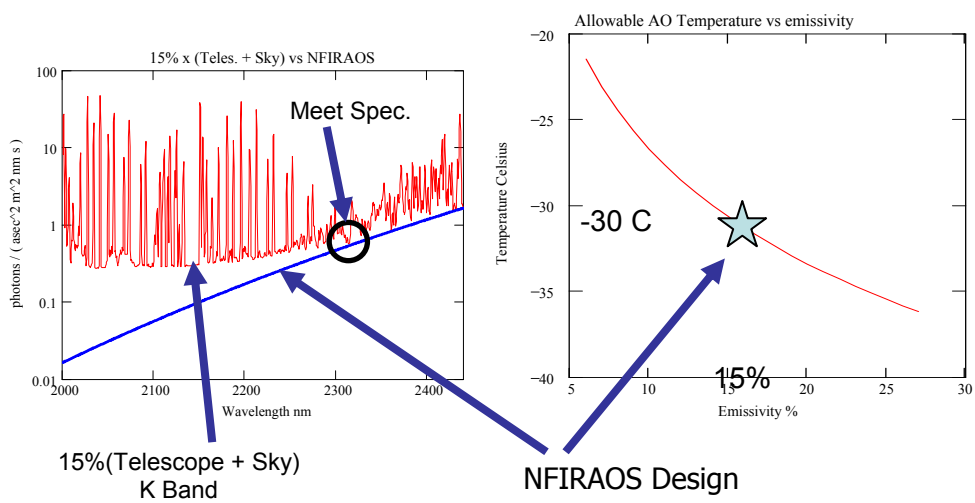

Figure 7 NFIRAOS Background vs. temperature

Therefore, as a result of the NFIROAS CoDR, we are re-examining the tradeoffs between increased observing time and technical risk of cooling NFIRAOS. Operating NFIRAOS at the expected mountain-top ambient temperature of 0 C will increase observing time by a factor of 2.5 in the worst case.

5. PERFORMANCE MODELING

Performance analysis of NFIRAOS is much more detailed and comprehensive than the usual CoDR level error budgeting and standard scaling law formulas. We have heavily employed the LAOS code[8] which features wave-optics modeling of Shack-Hartmann wavefront sensing with sodium laser guidestars, including the effects of uplink propagation with closed-loop tip/tilt correction, guidestar elongation due to the nonzero thickness of the sodium layer, physical optics effects in the Shack-Hartmann WFS, the "polar coordinate" CCD array pixel geometry under development by the AODP, and a variety of spot displacement estimation methods including the standard centroid algorithm and noise-weighted least squares. LOAS also includes a sophisticated hysteresis model for DM actuators.

In Table 1, which summarizes the full error budget with 23 high-order error terms and four tip-tilt terms, the residual wavefront error is shown at the centre, averaged over the field of view, and at the corners (worst case.) The category "Fundamental AO errors" are those set by the basic geometry of NFIRAOS (quantity of WFSs, DMs and actuators) together with noise and servo lag. For Baseline NFIRAOS these fundamental errors are predominated by the number of DM actuators, whereas the Upgrade system, which is optimized and evaluated over a wider field of view, is limited by the number of DMs.

Using LAOS we have separately estimated these Fundamental AO errors: noise and servo lag; tomography errors (measuring the three-dimensional atmospheric turbulence with a finite number of beacons); DM projection errors arising from collapsing the above estimate onto a two-layer model corresponding to the two DMs; fitting errors due to a finite number of actuators; WFS sampling errors from aliasing with limited subaperture resolution. Table 1 shows the NFIRAOS performance after extensive trade studies to determine the optimum laser beacon asterism, set the ideal altitude of conjugation of the upper DM, and define its actuator density.

Table 1 NFIRAOS Error Budget. Worst means the corners of the square field of view. Note that the Upgraded NFIRAOS performance is stated over a wider field of view than the baseline system.

NFIRAOS error budget 9-Feb-06 **TMT.AOS.TEC.05.044.DRF10**	**Baseline 10" FOV**			**Upgrade 30" FOV**		
	Center nm rms	Average nm rms	Worst nm rms	Center nm rms	Average nm rms	Worst nm rms
High order errors						
Fundamental AO errors	**129.9**	**135.5**	**147.7**	**96.7**	**116.3**	**157.1**
AO implementation	**89.1**	**88.3**	**86.9**	**77.6**	**76.8**	**75.1**
Uncorrectable Telescope Errors	**45.0**	**45.0**	**45.0**	**25.0**	**25.0**	**25.0**
Uncorrectable Instrument Errors	**30.0**	**30.0**	**30.0**	**30.0**	**30.0**	**30.0**
GRAND TOTAL High Order Errors	**166.5**	**170.5**	**179.7**	**130.0**	**144.7**	**178.5**
Tip-Tilt Errors (mas rms)	1.78	1.81	2.00	1.68	1.71	2.22
equivalent higher order nm rms (2 axis)	**85.0**	**86.3**	**94.1**	**80.9**	**82.3**	**102.5**
TOTAL delivered wave-front error	**186.9**	**191.1**	**202.9**	**153.2**	**166.5**	**205.8**

The AO implementation errors include: DM hysteresis; actuator saturation (non-existent with the planned 8-10 μm DM stroke); actuator calibration (offset and gain vs temperature); DM influence function imperfections; DM to WFS optical mis-registration; LGS WFS spot estimation; sodium layer focus tracking; non-common-path calibration; obscuration from the telescope secondary mirror supports; real-time controller numerical round-off; uncorrectable NFIROAS optics errors. Next, the uncorrectable telescope error item is an allocation from the top-level TMT observatory error budget. Similarly the uncorrectable instrument error is an allocation imposing a requirement on client instruments.

For tip/tilt error modeling, we used a Monte Carlo sky coverage simulator for multiple tip/tilt natural guide stars.[9] This code evaluates the overall tip/tilt error associated with each randomly generated NGS asterism, accounting for the combined effects of anisoplanatism, servo lag, WFS noise, telescope windshake, and any partial "sharpening" of the NGS images provided by the LGS AO system. Low-order (but tip-tilt removed) LGS WFS measurements are also included in the formulation of the tip/tilt estimation algorithm, since these measurements provide additional information on the 3-dimensional turbulence profile which is useful to reduce the estimation error due to anisoplanatism. The simulation includes T/T woofer-tweeter control and analysis of the residual errors resulting from using noisy, finite bandwidth NGS WFS focus measurements to keep the LGS WFSs focused on the varying range of the sodium layer.[11]

5.1 Woofer-Tweeter Tip- Tilt Control

Instead of a separate tip-tilt mirror, NFIRAOS' ground-conjugate deformable mirror (~50 kg mass) is mounted on a tip-tilt platform, (Figure 6) which, due to the inertia, will only have a ~20 Hz bandwidth — too slow to correct tip-tilt disturbance well enough, especially the windshake, which, for TMT, is much more challenging to correct than the atmospheric tip-tilt. Note that the amplitude of windshake disturbance is expected to be tiny compared with existing telescopes because of TMT's size: wind gusts are small relative to the telescope, which also has a large inertia. Only a fraction of the Tip-tilt can be corrected directly on the deformable mirrors, because of the limited stroke of the actuators. We plan a woofer-tweeter approach[4], in which the high amplitude low temporal frequencies of tip-tilt are corrected by the tip-tilt

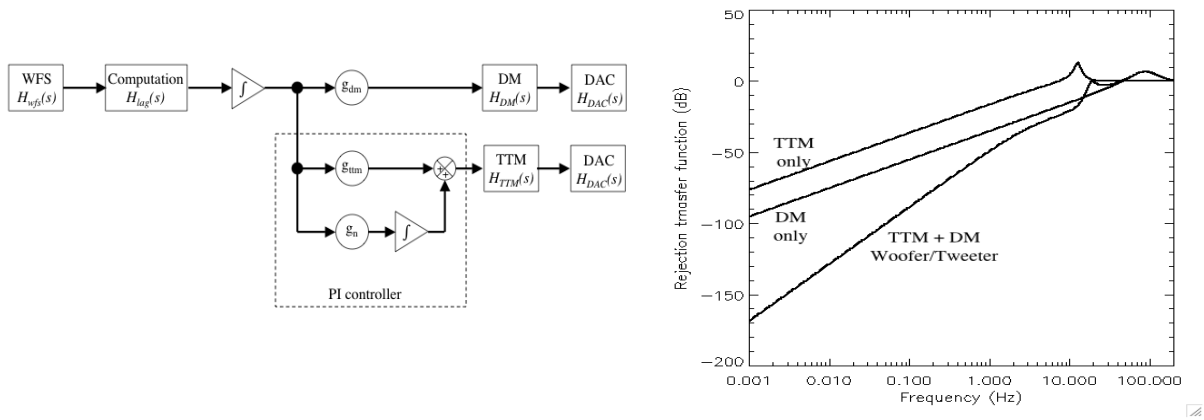

Figure 8 Woofer-tweeter tip/tilt control. T/T is applied to the DM and offloaded via a Proportional+Integral controller to the TTM. The rejection transfer functions for a frame rate of 400 Hz, a computational delay of 1 ms and a TTM with a 20 Hz –3 dB bandwidth

platform, whereas the low amplitude high temporal frequencies are corrected by the deformable mirror. This approach is based on a double integration control scheme and provides a much better attenuation of the windshake: 0.4 mas rms residual instead of 3.6 mas. The double integrator is stabilized by a proportional path in the offloading process from the first integrator to the tip/tilt mirror, allowing higher gains and better performance than a pure integrator offload. We find that, for a 5-σ T/T event, we use only ~1 micron of peak-valley stroke on the actuators at the edge of the pupil.

5.2 Sodium Tracking

Laser guide star (LGS) adaptive optics systems for extremely large telescopes must handle an important effect that is negligible for current generation telescopes. Wavefront errors, due to improperly focussing laser wavefront sensors (WFS) on the mesospheric sodium layer, are proportional to the square of the telescope diameter. The sodium layer, whose mean altitude is approximately 90 km, can move vertically at rates of up to a few metres per second[5]; a few seconds lag in refocusing can substantially degrade delivered image quality (15 m defocus can cause 120 nm residual wavefront error on a 30 m telescope.) As well, the range of temporal frequencies of sodium altitude focus, overlaps the temporal frequencies of focus caused by atmospheric turbulence. Only natural star wavefront sensors can disentangle this

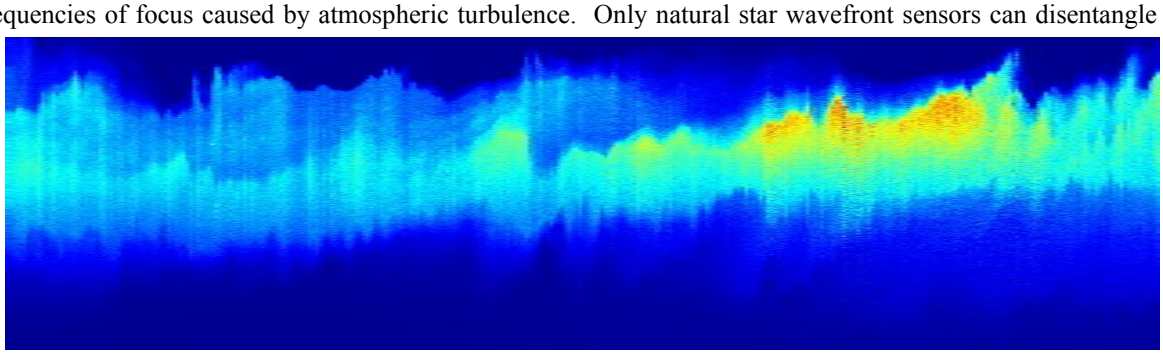

Figure 9 Profiles of Sodium return vs altitude and time. Each column of pixels shows a single 1-minute Lidar profile taken with the Purple Crow Lidar at the University of Western Ontario. The vertical axis ranges from 80 to 100 km, and the total time along the horizontal axis is ~6 hours.

degeneracy. However, limited mechanical bandwidth of focus mechanisms, (e.g. the third lens in Figure 5 is 50 kg and moves 1 m) causes appreciable tracking errors. In principle, electronic offsets could be rapidly applied to laser WFS measurements. Unfortunately, to provide useable sky coverage, integrating sufficient photons on natural guide star detectors causes an unavoidable time delay, again resulting in focus tracking errors. Figure 10 shows the residual error after applying electronic offsets to the LGS WFSs, at 90 Hz NGS WFS frame rate, which gives 50% sky coverage at the galactic pole[9].

6. COMPUTING

The overall Observatory Control System directs the TMT Adaptive Optics Sequencer (AOSEQ), which in turn directs the computing systems within NFIRAOS: the RTC, which reads the wavefront sensors and controls the Tip-tilt and deformable mirrors; the Component Controller (CC), which is responsible for controlling and monitoring the slow opto-mechanical AO devices such as the "probe arms" of the wavefront sensors or the simulated LGS sources, etc.

6.1 Real Time Controller

NFIRAOS requires a Real Time Controller (RTC)[10] with computational capabilities far beyond the current generation of astronomical AO Real Time Controllers. TMT is planning to use a common design of electronics and algorithms for all the AO systems' RTCs, based on a mixture of digital signal processors and field programmable gate arrays (FPGAs), mounted on ~ 7-15 printed circuit boards. The TMT RTC will operate under the control of the AOSEQ to execute instructions provided either by users or the AO Sequencer itself. It will compute commands at 800 Hz for two DMs and a Tip Tilt platform. It will interface with additional telescope and AO subsystems, including the Telescope Control System, the LGS Facility, the Adaptive Secondary Mirror, and the Component Controllers of NFIRAOS and its client instruments. Finally, it will update and optimize the control algorithms in real time as observing parameters and atmospheric conditions change.

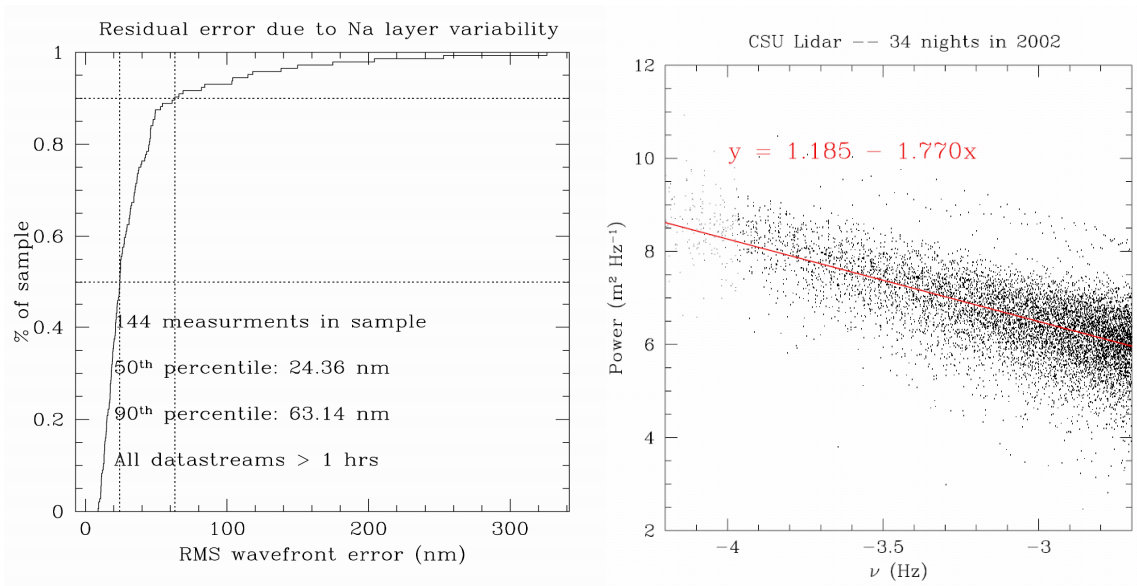

Figure 10 Left panel shows the residual Na focus tracking error cumulative probability. The right panel is the best fit to the power spectra of sodium altitude from 144 Colorado State University LIDAR data sets, each 1-8 hours. (log-log scale)

The RTC will input the pixels from multiple LGS wavefront sensors, which for the baseline NFIRAOS will be Shack Hartmann WFS with 60x60 sub-apertures. In LGS mode, the RTC will also input the measurements from additional NGS WFSs: (i) low order high bandwidth WFSs (referred as "TTF" WFS) located within client instruments, sensing tip-tilt focus and (ii) high order low bandwidth WFSs (located in NFIRAOS, and referred as "Truth WFS") used to calibrate slowly-varying WFS biases due to flexure effects and variations in the sodium layer profile. NFIRAOS will also have an NGS-only mode where the RTC will correct turbulence using a high-order high-bandwidth NGS WFS (referred to as the "NGS WFS"). The RTC will reconstruct each frame of the WFS measurements into commands at the rate of 800 Hz using a minimum variance wavefront reconstructor which has two sequential steps: tomography (estimating the atmos-

pheric turbulence as phase screens at discrete layers) and fitting (summing and projecting onto the two DMs). The minimum variance algorithm most studied by TMT to derive AO performance estimates is the Multi Grid Preconditioned Conjugate Gradient (MG-PCG)[13]. An alternative to this algorithm is the Fourier Domain Preconditioned Conjugate Gradient (FD-PCG)[14], which is highly parallelizable and thus promising in terms of processing requirements.

Table 2 WFSs for NFIRAOS

	LGS mode	**LGS WFS**	6 LGS WFSs (radial CCD 60x60 subapertures, 6x12 pixels each subaperture)
NGS mode		**TTF WFS**	3 TTF WFSs (2 with 1x1 sub-aperture and 1 with 2x2 sub-apertures, all equipped with an IR detector with 128x128 pixels) Located within client instruments.
		TWFS	1 Truth WFS (equipped with a CCD with 120x120 sub-apertures and 8x8 pixels/sub-aperture) Within NFIRAOS
		NGS WFS	1 NGS WFS (equipped with the radial CCD with 60x60 sub-apertures and 4x4 pixels/sub-apertures)

In parallel with the LGS reconstruction, the RTC will also process the TTF WFSs at a rate varying between 10 Hz and 800 Hz. Tip, tilt and focus will be applied to the DMs and tip tilt mirror. Image distortion (magnification, skew, differential magnification) also sensed by the natural guide stars will be fit with low-order modes and added in opposite polarity to the two DMs to adjust the field distortion without causing wavefront error. For example, if the image has a different scale in two orthogonal directions, then by applying opposite saddle-shaped figures to each DM, the net wavefront error introduced is zero, but the XY magnification will be equalized.

The filtered commands will be clipped to avoid saturating the mirrors. Uncontrolled (invisible) modes on the mirrors, e.g., as the result of clipping, will be nulled. The edge actuators will be slaved to maintain the figure of the deformable mirrors at the boundary and finally, the command vector will be compensated for non-linearities, and offset and gain variations between actuators. The final DM and TT commands will be fed back to the LGS wavefront reconstruction process, for the pseudo-open-loop wavefront reconstruction algorithm. As well, the DM and T/T commands will be slowly offloaded to the telescope control system, and when available, to the adaptive secondary mirror.

6.2 RTC Optimization background processes

NFIRAOS will compensate in real-time for variations in both NGS and LGS WFS gains and biases induced by changes in seeing, flexure and thermal effects and variations in the sodium layer density profile. More than a dozen background tasks continuously optimize the parameters of the RTC and provide data to external equipment such as instrument rotators, the laser launch system and the telescope control system. For example, the LGS WFS gradient algorithm will be updated to track variations in seeing and the sodium layer profile, by dithering the LGS-pointing on the sky.

The zero point for the gradient algorithm will be supplied as a reference vector from the Truth WFS. For the first-light NFIRAOS, this is a 120 x 120 subaperture sensor with eight pixels per subaperture intended to compensate for non-common path errors due to flexures and thermal expansion, as well as changes in turbulence and the sodium layer. A second component of the LGS reference vector is derived from the natural guide star focus signal to compensate for the high speed altitude variations of the sodium layer. On longer time scales, this focus is off-loaded to the LGS zoom optics.

The RTC will provide AO loop data to the TMT Science Data System for characterizing the AO-compensated point-spread function (PSF) at the science instrument focal plane. AO telemetry data will also be stored and transferred to an engineering archive for diagnostic purposes.

The irregular perimeter of the telescope pupil and the shadow of the secondary mirror supports rotate on the DMs. However, the LGS WFSs stare at the DMs in a fixed orientation – thus the RTC must add and drop active WFS subapertures from the tomography during a science exposure.

High speed tip/tilt measurements from the LGS WFSs are used to control the pointing of the laser guide stars. In the current concept this would be via fast steering mirrors in the laser launch system, but we are considering incorporating such mirrors directly in each LGS WFS. This would avoid the time delay for light to make a round-trip to sodium layer, and

thereby improve servo performance: Tighter tracking would keep the spots better centered on the CCD to preserve dynamic range and linearity of the LGS WFS.

For high-precision astrometry, the three TTF WFS within instruments must be accurately positioned before a science exposure. To determine the optimal position of these WFS in the face of slow-frequency atmospheric anisoplanatism, there is a special "Probe Arm" (PA) guiding mode. During PA guiding, the RTC outputs T/T errors to the instrument's components controller which servos the WFS probe offsets to null these tip/tilt errors over durations of about a minute. Then, after having averaged out atmospheric anisoplanatism, the probe offsets are held fixed, and the science exposure begins. During the exposure, the MCAO action of two DMs keeps the image distortion pinned to these three stars. At the same time, overall image rotation is fit by least-squares to the three TT sensors and is reported as an error signal by the RTC to the instrument controller, which adjusts its rotator tracking. Similarly, the best fit of rotation to the LGS WFS tip/tilt signals is sent to the LGSF as an error signal to rotate the asterism on the sky to keep it aligned on the fixed array of LGS WFS barrels in NFIRAOS.

ACKNOWLEDGMENTS

The authors gratefully acknowledge the support of the TMT partner institutions. They are the Association of Canadian Universities for Research in Astronomy (ACURA), the Association of Universities for Research in Astronomy (AURA), the California Institute of Technology and the University of California. This work was supported, as well, by the Canada Foundation for Innovation, the Gordon and Betty Moore Foundation, the National Optical Astronomy Observatory, which is operated by AURA under cooperative agreement with the National Science Foundation, the Ontario Ministry of Research and Innovation, and the National Research Council of Canada.

REFERENCES

1. G. H. Sanders, J. E. Nelson, TMT status report, *this conference [6267-60]*.
2. B.L. Ellerbroek, A Conceptual Design for the Thirty Meter Telescope Adaptive Optics Systems, this conference [6272-13].
3. D. Crampton, L. Simard, Instrument concepts and scientific opportunities for TMT*, this conference [6269-67]*.
4. J.-P. Véran, et al, Woofer-tweeter tip-tilt control for NFIRAOS on TMT, *this conference [6272-48]*.
5. G. Herriot, P. Hickson, J.-P. Véran, Focus errors from tracking sodium layer altitude variations with laser guide star adaptive optics for the Thirty Meter Telescope, *this conference [6272-52]*.
6. L. Gilles, Laser Guide Star Shack-Hartman Wavefront Sensor Modeling: Matched Filtering, Wavefront Sensor Non-Linearity, and Impact of Sodium Layer Variability for the Thirty Meter Telescope, *this conference [6272-57]*.
7. L. Gilles, Laser Guide Star Multi-Conjugate Adaptive Optics Performance of the Thirty Meter Telescope with Elongated Beacons and Matched Filtering, *this conference[6272-169]*.
8. L. Gilles, Multi-Conjugate Adaptive Optics Performance Comparison of Wavefront Reconstruction and Fitting Algorithms for the Thirty Meter Telescope: MGPCG, FDPCG, and Order N Tomography, *this conference [6272-110]*.
9. R. M. Clare, Sky coverage and tip/tilt error analysis for the thirty meter telescope, *this conference [6272-107]*.
10. C. Boyer, TMT Adaptive Optics Systems Control Architecture, *this conference [6272-35]*.
11. R. R. Joyce, The laser guide star facility for the Thirty Meter Telescope**,** *this conference [6272-51]*.
12. J.W. Beletic, Follow the Yellow-Orange Rabbit: A CCD optimized for wavefront sensing a pulsed sodium laser guide star, *Proc. SPIE 5499, 302-309 (2004)*.
13. L. Gilles, B. L. Ellerbroek, and C. R. Vogel, Preconditioned Conjugate Gradient Wavefront Reconstructions for MultiConjugate Adaptive Optics, *Appl. Opt. 42, p.5233, 2003*
14. Q. Yang, C.R. Vogel, B. L. Ellerbroek, Fourier Domain Preconditioned Gradient Conjugate algorithm for atmospheric tomography, *Appl. Opt. (in press 2006)*
15. J. Dunn, C. Boyer, P. Daly, K. Gilles, B. Marshall, D. Silva, Observatory Software for the Thirty Meter Telescope (TMT)" in *Observatory Operations: Strategies, Processes and Systems, D. R. Silva and R. E. Doxsey Eds., SPIE Proc 6270, 2006*
16. R.E. Marshall, P. N. Daly, M.J. Sirota, The Telescope Control System supervisory controller for the Thirty Meter Telescope (TMT), *H. Lewis and A. Bridger Eds., SPIE Proc 6274, 2006.*